U.S. Department of Transportation
Federal Highway Administration

1200 New Jersey Avenue, SE.
Washington, DC 20590

December 23, 2008

In Reply Refer To: HSSD/B-88F

Mr. Jesper Sorensen
Safence, Inc.
1557 NW. Ballard Way
Seattle, WA 98107

Dear Mr. Sorensen:

This letter is in response to your request for the Federal Highway Administration (FHWA) acceptance of a roadside safety system for use on the National Highway System (NHS).

Name of system: SAFENCE in 1:4 Sloped Medians
Type of system: Cable Barrier
Test Level: MASH TL-3
Testing conducted by: Swedish Road and Transport Research Institute (VTI)
Date of request: October 21, 2008
Date of completed package: Video link received November 18, 2008
Drawings received December 10, 2008

You requested that we find this system acceptable for use on the NHS under the provisions of the proposed American Association of State Highway and Transportation Officials' Manual for Assessing Safety Hardware 2008 (MASH-08).

Requirements
Roadside safety systems should meet the guidelines contained in the NCHRP Report 350. The FHWA Memorandum "ACTION: Identifying Acceptable Highway Safety Features" of July 25, 1997, provides further guidance on crash testing requirements of longitudinal barriers. You have chosen to anticipate the adoption of MASH-08, an option that the FHWA has offered with the understanding that additional testing may need to be done if changes to the test criteria are made before MASH-08 is formally adopted.

Description
The Blue System/Safence has been tested and accepted under the following the FHWA Acceptance Letters:

FHWA#	Date	NCHRP	Cables	Name/Notes
B-88	July 13, 2001	TL-3	4	Roadside Driven elliptical posts
B-88A	January 28, 2004	TL-3	4	3504RI Median Driven I posts
B-88B	June 08, 2004	TL-3	4	Concrete footers

MOVING THE AMERICAN ECONOMY

B-88C	May 26, 2005	TL-3	4	Roadside Allow "C" posts
B-88D	December 27, 2006	TL-4	3	3RC Modified “C” posts
B-88E	July 31, 2007	TL-4	4	Add fourth Cable to TL-4 Safence

Cable heights in millimeters in these systems are as follows:

			#1	**#2**	**#3**	**#4**
B-88	July 13, 2001	TL-3	480	630	780	930
B-88A	January 28, 2004	TL-3	480	560	640	720
B-88B	June 8, 2004	TL-3	480	560	640	720
B-88C	May 26, 2005	TL-3	480	630	780	930
B-88D	December 27, 2006	TL-4	480	640	720	-
B-88E	July 31, 2007	TL-4	480	560	640	720
B-88F	(This Letter) MASH	TL-3	500	785	(880*)	975

* (Tested with 3 cables – 4 cable optional)

Your current request is for the three-cable Safence to be found acceptable when placed in a 1:4 – 1:4 sloped ditch. As the installation in a sloped median is not covered in MASH-08, Mr. Jan Wenäll of VTI discussed the proposed test requirements with Mr. Nicholas Artimovich of my office. The 19mm (3/4 in) diameter cables were installed at heights of 500 mm, 785 mm, and 975 mm (19.7 in, 30.9 in, 38.4 in) above the ground using the Safence “C” shaped posts, spaced 4.9 m (16 ft) apart, each with a slot in the top. The posts were rolled from ASTM A1011-04a high strength – low alloy grade 50 steel. They were 2100 mm (82.7 in) long with 1050 mm (41.3 in) above the ground and an embedment depth of 1050 mm (41.3 in) in “standard soil.”

The test barrier was located 1200 mm (4 ft) down from the slope break point. The three “Trulay Ø 19mm” steel cables were tensioned to 11.77 kN (2645.55 lbf) corresponding to the tension requirement for ambient temperatures of 37.8 degrees C or 100.0 degrees F. Details of the posts and cable arrangement are shown in the enclosed drawings for reference.

The median ditch constructed at VTI was 8 m (26 ft) wide and 55 m (181 ft) long. The median slopes were 1:4 and the rounded invert of the ditch was approximately 1m (3.3 ft) below the adjacent terrain. The test article length was 185 m (607 ft) between concrete anchors (as the installed length of the barrier was longer than the actual median ditch, part of the barrier was installed on level ground beyond the end of the ditch).

Crash Testing

Two tests were conducted on the Blue System/Safence in the 1:4-1:4 median. In test 3-11 the Ford Transit 350E (2222 kg, 4898 lb) impacted at 101.5 km/hr (63 mph) at 25 degrees. The vehicle was redirected by the barrier and stopped after traveling about 55 m (180 ft). In test 3-10 the Kia Rio (1124 kg, 2478 lb) with a dummy impacted at a speed of 103 km/hr (64 mph) at an angle of 25 degrees. In Test 3-10 the vehicle traversed the ditch and impacted the backslope prior to contacting the barrier. The vehicle was restrained by the barrier and stopped after traveling about 41 m (134 ft). The maximum dynamic deflection of the barrier was 5 m (16.4 ft). Summary pages of the tests are enclosed for reference.

Findings
The vehicle trajectories and occupant risk values were within the evaluation criteria of MASH-08. Therefore, the system described above and detailed in the enclosed drawings is acceptable for use on the NHS under the range of conditions tested, when such use is acceptable to a highway agency.

You also asked for three additional considerations:

1) The tests were performed with two different anchors in order to evaluate both types. One was a trapezoidal precast anchor and the other was square and was poured in the field. As no movement of either anchor was observed, both will be acceptable.
2) The tests were performed with the 3-cable Safence. You requested that the 4-cable version also be considered acceptable under similar median conditions. The 4th cable will be placed between the middle and top cables at a height of 880 mm (34.6 in). We concur in this addition with the provision that the fourth cable have its own slot in the end anchor.
3) Safence posts may be installed with pre-cast footings, or concrete footings that are cast in place. You asked that the use of either steel sleeves or plastic sleeves be acceptable for forming the post hole in the concrete. As the posts remain in the sleeves during impact, there is no difference in performance between steel or plastic sleeves. Therefore either type sleeve is acceptable in any Safence installation using cast-in-place footings.

Please note the following standard provisions that apply to the FHWA letters of acceptance:

- This acceptance is limited to the crashworthiness characteristics of the systems and does not cover their structural features, nor conformity with the Manual on Uniform Traffic Control Devices.
- Any changes that may adversely influence the crashworthiness of the system will require a new acceptance letter.
- Should the FHWA discover that the qualification testing was flawed, that in-service performance reveals unacceptable safety problems, or that the system being marketed is significantly different from the version that was crash tested, we reserve the right to modify or revoke our acceptance.
- You will be expected to supply potential users with sufficient information on design and installation requirements to ensure proper performance.
- You will be expected to certify to potential users that the hardware furnished has essentially the same chemistry, mechanical properties, and geometry as that submitted for acceptance, and that it will meet the crashworthiness requirements of the FHWA and the NCHRP Report 350.
- To prevent misunderstanding by others, this letter of acceptance is designated as number B-88F and shall not be reproduced except in full. This letter and the test documentation upon which it is based are public information. All such letters and documentation may be reviewed at our office upon request.
- The Blue Systems/Safence cable barriers are patented products and considered proprietary. If proprietary systems are specified by a highway agency for use on Federal-aid projects, except exempt, non-NHS projects, (a) they must be supplied through competitive bidding with equally suitable unpatented items; (b) the highway agency must certify that they are

essential for synchronization with the existing highway facilities or that no equally suitable alternative exists; or (c) they must be used for research or for a distinctive type of construction on relatively short sections of road for experimental purposes. Our regulations concerning proprietary products are contained in Title 23, Code of Federal Regulations, Section 635.411.

- This acceptance letter shall not be construed as authorization or consent by the FHWA to use, manufacture, or sell any patented system for which the applicant is not the patent holder. The acceptance letter is limited to the crashworthiness characteristics of the candidate system, and the FHWA is neither prepared nor required to become involved in issues concerning patent law. Patent issues, if any, are to be resolved by the applicant.

Sincerely yours,

David A. Nicol, P.E.
Director, Office of Safety Design
Office of Safety

Enclosures

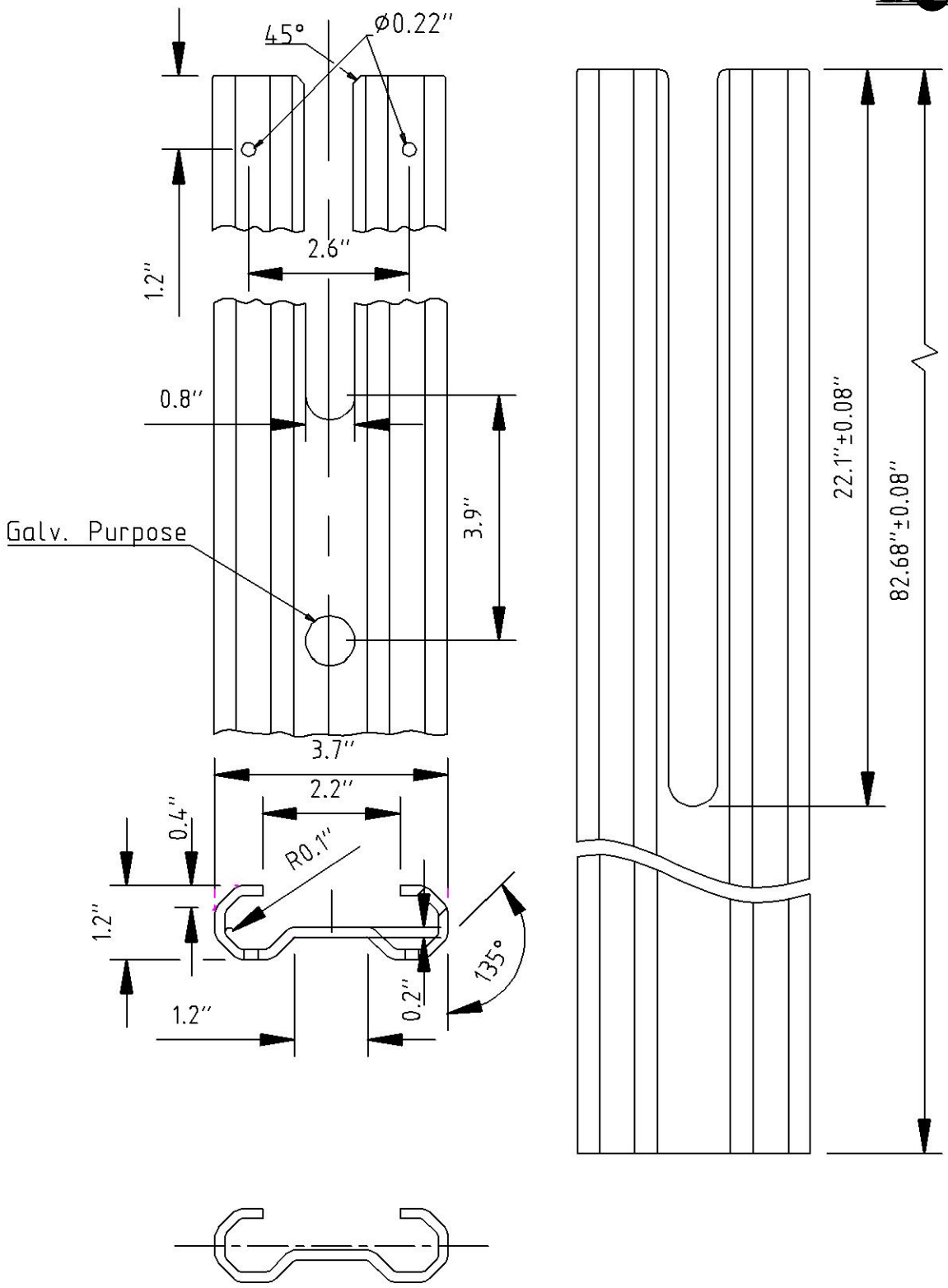

Designed	Drawn	Approved - date	Tolerance requirements	Units	Proj.	Scale
MH	NM	2008-07-14		inch		10:1

BLUE SYSTEMS AB
Hälleflundregatan 24
S-426 58 Västra Frölunda
SWEDEN
Tel: +4531 297216 Fax: +4531 298235
E-post: info@bluesystems.se

Material			
DOMEX 350, ASTM A1011-04a HSLAS grde 50			
Name	Issue	Sheet	File
C-POST 1:4 slope			
	Drawing No. D-051imp		

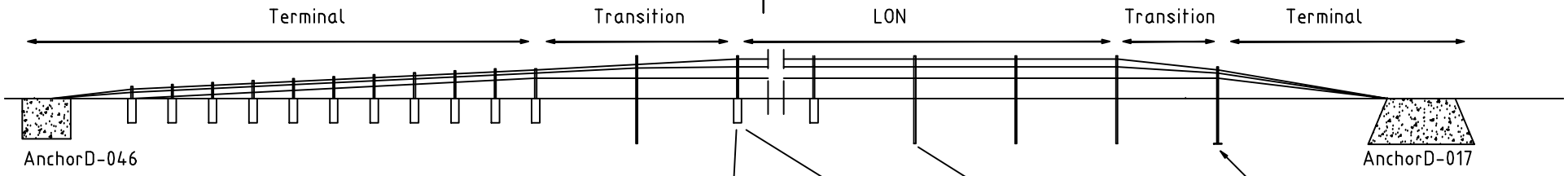

MASH08 SLOPE 1:4	
POST TYPE	POST DISTANCE
D 051	16 FEET [4.9METER]

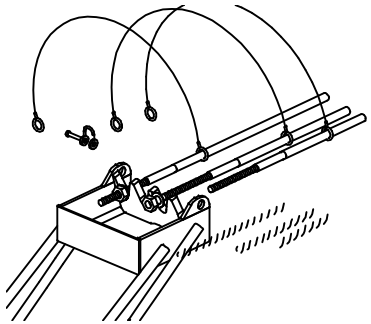

WIRE ANCHOR FITTING (D-018)

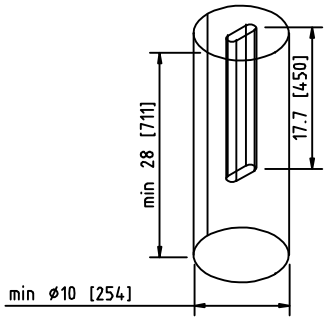

FOOTING (D-012)

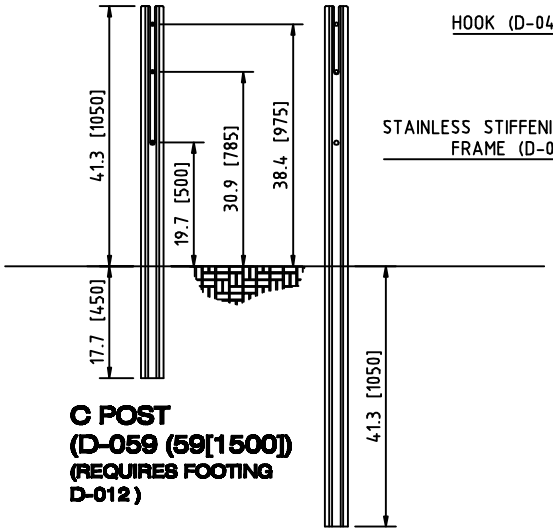

C POST (D-059 (59[1500]) (REQUIRES FOOTING D-012)

C POST (D-051)

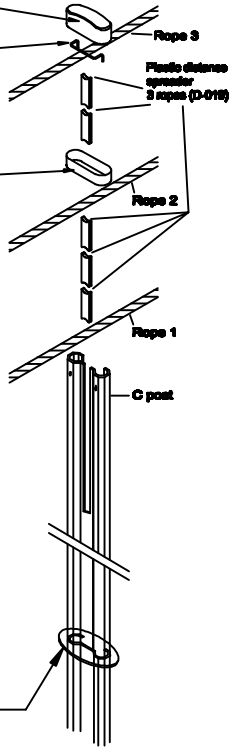

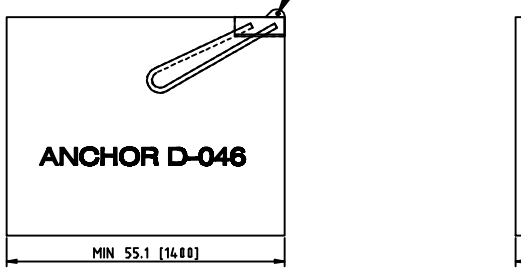

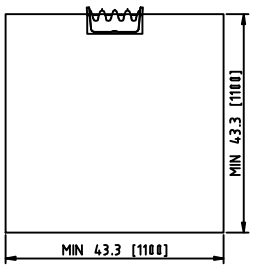

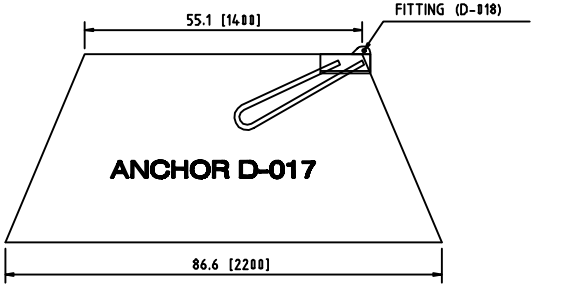

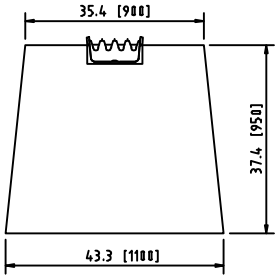

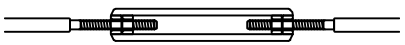

TENSIONING UNIT (D-024)

Safence Inc. accepts no liability for any changes made to the enclosed drawings of the Safence System and the Safence Terminal. These drawings are to only be used by State designers and engineers and may not be altered. Safence is not responsible for any modifications or changes to the enclosed documents

Designed	Drawn	Approved - date	Units	Proj.	Scale
MH	NM	2006-07-01	ft (m) , inch (mm)		-

SAFENCE Ink
1557 N.W.Ballard Way
Seattle, WA 98107
Phone 2064094018
e-mail: jaqueline.swanson@safence.com

Material

Name: SAFENCE SLOPE 1:4

Issue | Sheet | File

Drawing No. SRB-018

Crash Safety

Test report 56746

Date:

2008-10-03

Annex 9;
Acceleration graphs

```
Test Summary Report (Using SAE Class 180 Filter on Acceleration Data and Angular Velocity/Dis

General Information
   Test Agency:    VTI
   Test Number:    RB0626_1
   Test Date:      2008-06-26
   Test Article:   Slant racke Blue Systems

Test Vehicle
   Description:              KIA Rio UDE 716
   Test Inertial Mass:       1125 kg
   Gross Static Mass:        1200 kg

Impact Conditions
   Speed:   103.0  km/hr
   Angle:   25.0   degrees

Occupant Risk Factors
   Impact Velocity (m/s)       at 0.5096 seconds on left side of interior
      x-direction    6.3
      y-direction    -1.3

   THIV (km/hr):     26.1      at 0.5331  seconds on front of interior
   THIV (m/s):       7.3

   Ridedown Accelerations (g's)
      x-direction    -4.2      (0.5308 -  0.5408 seconds)
      y-direction    -2.8      (1.3358 -  1.3458 seconds)

   PHD (g's):        4.3       (0.5331 -  0.5431 seconds)

   ASI:              0.90      (0.4017 -  0.4517 seconds)

Max. 50msec Moving Avg. Accelerations (g's)
   x-direction       -8.0      (0.4020 -  0.4520 seconds)
   y-direction       -2.1      (2.1374 -  2.1874 seconds)
   z-direction       -6.1      (0.4007 -  0.4507 seconds)

Max Roll, Pitch, and Yaw Angles (degrees)
   Roll            40.7      (0.7745 seconds)
   Pitch             15.2      (0.7568 seconds)
   Yaw             36.3      (1.2613 seconds)
```

Test Summary Report (Using SAE Class 180 Filter on Acceleration Data and Angular Velocity/Dis

General Information
Test Agency: VTI
Test Number: RB60624_1
Test Date: 2008-06-24
Test Article: Blue Systems Vajer

Test Vehicle
Description: Ford Transit TFL 563
Test Inertial Mass: 2147 kg
Gross Static Mass: 2222 kg

Impact Conditions
Speed: 101.5 km/hr
Angle: 25.0 degrees

Occupant Risk Factors
Impact Velocity (m/s) at 0.3663 seconds on left side of interior
x-direction -0.4
y-direction -2.6

THIV (km/hr): 11.4 at 0.3788 seconds on left side of interior
THIV (m/s): 3.2

Ridedown Accelerations (g's)
x-direction 2.5 (5.0649 - 5.0749 seconds)
y-direction 7.4 (0.6343 - 0.6443 seconds)

PHD (g's): 7.5 (0.6343 - 0.6443 seconds)

ASI: 0.70 (0.2077 - 0.2577 seconds)

Max. 50msec Moving Avg. Accelerations (g's)
x-direction 2.1 (5.1482 - 5.1982 seconds)
y-direction 4.5 (0.6343 - 0.6843 seconds)
z-direction 6.5 (0.2149 - 0.2649 seconds)

Max Roll, Pitch, and Yaw Angles (degrees)
Roll -17.0 (0.5587 seconds)
Pitch 6.9 (3.3846 seconds)
Yaw 27.0 (0.7373 seconds)