W2-30

U.S. Department of Transportation
Federal Highway Administration

400 Seventh St., S.W.
Washington, D.C. 20590

April 10, 2000

Refer to: HSA-1

Mr. David Stoudt
General Manager
Sign Up Corporation
PO Box 14624
Portland, Oregon 97293

Dear Mr. Stoudt:

Thank you for your letter of September 8, 1999, to Mr. Nicholas Artimovich of my office requesting Federal Highway Administration (FHWA) acceptance of your company's Model MS-1000 and MS-5000 portable sign stands as crashworthy traffic control devices for use in work zones on the National Highway System (NHS). Accompanying your letter was a detailed description and drawing of each stand. You requested that we find the listed devices acceptable for use on the NHS under the provisions of the National Cooperative Highway Research Program Report 350 'Recommended Procedures for the Safety Performance Evaluation of Highway Features."

The FHWA guidance on crash testing of work zone traffic control devices is contained in two memoranda. The first, dated July 25, 1997, titled "Information: Identifying Acceptable Highway Safety Features," established four categories of work zone devices: Category I devices were those lightweight devices which could be self-certified by the vendor, Category II devices were other lightweight devices which needed individual crash testing, Category III devices were barriers and other fixed or massive devices also needing crash testing, and Category IV devices were trailer mounted lighted signs, arrow panels, etc. The second guidance memorandum was issued on August 28, 1998, and is titled "INFORMATION: Crash Tested Work Zone Traffic Control Devices." This later memorandum lists devices that are acceptable under Categories I, II, and III.

Numerous crash tests have been conducted on "X-Footprint" portable sign stands. "Compact" type stands, which consist of the base legs, rigid or spring support, and a short vertical metal mast supporting the fiberglass cross bracing of a roll-up sign have performed well in crash testing. Recent tests with flags have also shown acceptable results with fixed or spring mounted bases. Your company's compact sign stands, listed in the table below and shown in the enclosed drawings, are similar to the successfully tested sign stands.

Model # MS-	Sign Size	Legs	Flag Support	Flag Staffs
1000X (48-FU)	1220 mm	Telescoping	Bolted to mast	2 Fiberglass
1000X(48-FU3)	1220 mm	Telescoping	Bolted to mast	3 Fiberglass
1000X(48-MS22)	1220 mm	Telescoping	Bracket w/ tubes	3 Wood
1000X(36-FU)	920 mm	Telescoping	Bolted to mast	2 Fiberglass
1000X(36-FU3)	920 mm	Telescoping	Bolted to mast	3 Fiberglass
1000X(36-MS22)	920 mm	Telescoping	Bracket w/tubes	3 Wood
5000X(36-FU)	920 mm	Solid	Bolted to mast	2 Fiberglass
5000X(36-FU3)	920 mm	Solid	Bolted to mast	3 Fiberglass
5000X(36-MS22)	I92Omm	Solid	Bracket w/ tubes	13 Wood

The following conditions apply to all of the signs listed above:

1. Sign panel must be plastic/fabric "roll-up" type material
2. Vertical support above base is 7.94-mm thick x 31.75-mm wide (5/16-inch thick x 1 1/4-inch wide) fiberglass
3. Horizontal brace is 4.76.mm thick x 31.75-mm wide (3/16-inch thick x 1 1/4-inch wide) fiberglass
4. Sign mounting height is 5 1 mm (20 inches) above the ground
5. No metal mast may be used to support the sign (above the compact base assembly)

Because of the similarity of these signs to other "compact" portable sign stands that have met the F'HWA requirements, the devices listed above are acceptable for use on the NHS under the range of conditions temporary work zone traffic control devices are typically tested, when proposed by a State.

Our acceptance is limited to the crashworthiness characteristics of the devices and does not cover their structural features, nor conformity with the Manual on Uniform Traffic Control Devices. Presumably, you will supply potential users with sufficient information on design and installation requirements to ensure proper performance. We anticipate that the States will require certification from Sign Up Corporation that the hardware furnished has essentially the same chemistry, mechanical properties, and geometry as that submitted for acceptance, and that they will meet the crashworthiness requirements of FHWA and NCHRP Report 350. To prevent misunderstanding by others, this letter of acceptance, designated as number WZ-30, shall not be reproduced except in full.

specified for use on Federal-aid projects, except exempt, non-NHS projects, they: (a) must be supplied through competitive bidding with equally suitable unpatented items; (b) the highway agency must certify that they are essential for synchronization with existing highway facilities or that no equally suitable alternative exists or; (c) they must be used for research or for a distinctive type of construction on relatively short sections of road for experimental purposes. Our regulations concerning proprietary products are contained in Title 23, Code of Federal Regulations, Section 635.411, a copy of which is enclosed.

Sincerely yours,

Frederick G. Wright, Jr.
Program Manager, Safety

2 Enclosures

FHWA:HSA-1:NArtimovich:db:x61331:3/31/00
cc: Reader - HSA-1, Chron File
N. Artimovich - HSA-1
signupfin.wpd

signup™ CORP.

Originator of the Flex-Mast Stand and Power-Cell

MS-1000X (48-FU)

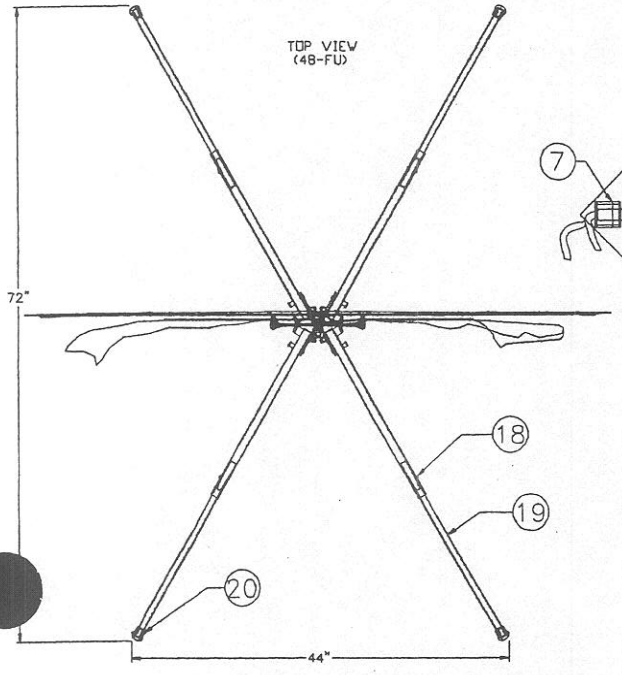

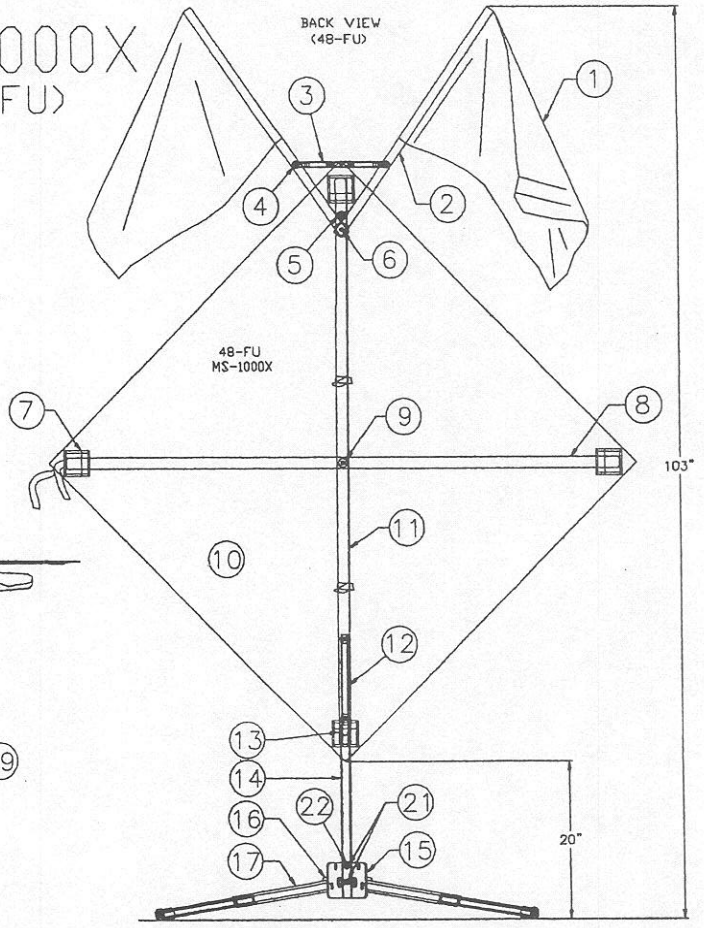

BILL OF MATERIALS

NO.	DESCRIPTIONS	QUANTITY
1	7 OZ X 18" SQ. VINYL FABRIC.	2
2	1/8" X 1" UNIDIRECTIONAL FIBERGLASS ISO POLYESTER RECTANGULAR BAR.	2
3	RUBBER STRETCH BAND.	1
4	5/16" X 3/4" SPRING PIN WITH 10/24" X 1 1/4" SLOT HEAD SCREW & LOCKNUT.	2
5	90 DUROMETER 3/4" X 1" URATHANE BUSHING WITH 1/4" X 1 1/4" SLOT HEAD SCREW & LOCKNUT.	1
6	10/24" X 1 1/4" SLOT HEAD SCREW WITH 10/24" LOCKNUT.	1
7	DOUBLED 18 OZ VINYL FABRIC POCKET.	4
8	3/16" X 1 1/4" X 64" UNIDIRECTIONAL FIBERGLASS REINFORCED ISO-POLYESTER RECTANGULAR BAR.	1
9	1/4" X 1" CAP SCREW WITH 1/4 X 1" STEEL FENDER WASHER & 1/4 LOCKNUT.	1
10	REFLEXITE VINYL FABRIC ROLL-UP SIGN 48" X 48".	1
11	5/16" X 1 1/4" X 64" LONG MAT./ROVING FIBERGLASS RECTANGULAR BAR.	1
12	.063" WALL X .750" SQ. X 12 3/4" LONG HRPO MILD STEEL TUBE.	1
13	1050 SPRING STEEL .0002 ZINC PLATED DETENT BUTTON.	1
14	.080" WALL X 1" SQ. X 20" LONG HRPO MILD STEEL TUBE.	1
15	3/16" HRPO MILD STEEL PLATE.	2
16	90 DUROMETER URATHANE BUSHING W/STAINLESS STELL LEG SPRING & HRPO MILD STEEL PIN.	4
17	.080" WALL X 1" SQ. X 24" LONG HRPO MILD STEEL TUBE.	4
18	1050 SPRING STEEL DETENT BUTTON.	4
19	.060" WALL X .750" SQ. x 21" HRPO MILD STEEL TUBE.	4
20	# 19 SBR RUBBER END CAP WITH STEEL/ALUMINIUM BLIND RIVET.	4
21	3/8" DIA. X 2 1/4" BOLTS WITH LOCK NUT.	2
22	3/16" X 1 1/4" X 4" HRPO MILD STEEL SPACERS.	2

NOTE: ALL NUTS & BOLTS ARE GRADE 5.

MS-1000X
(48-FU3)

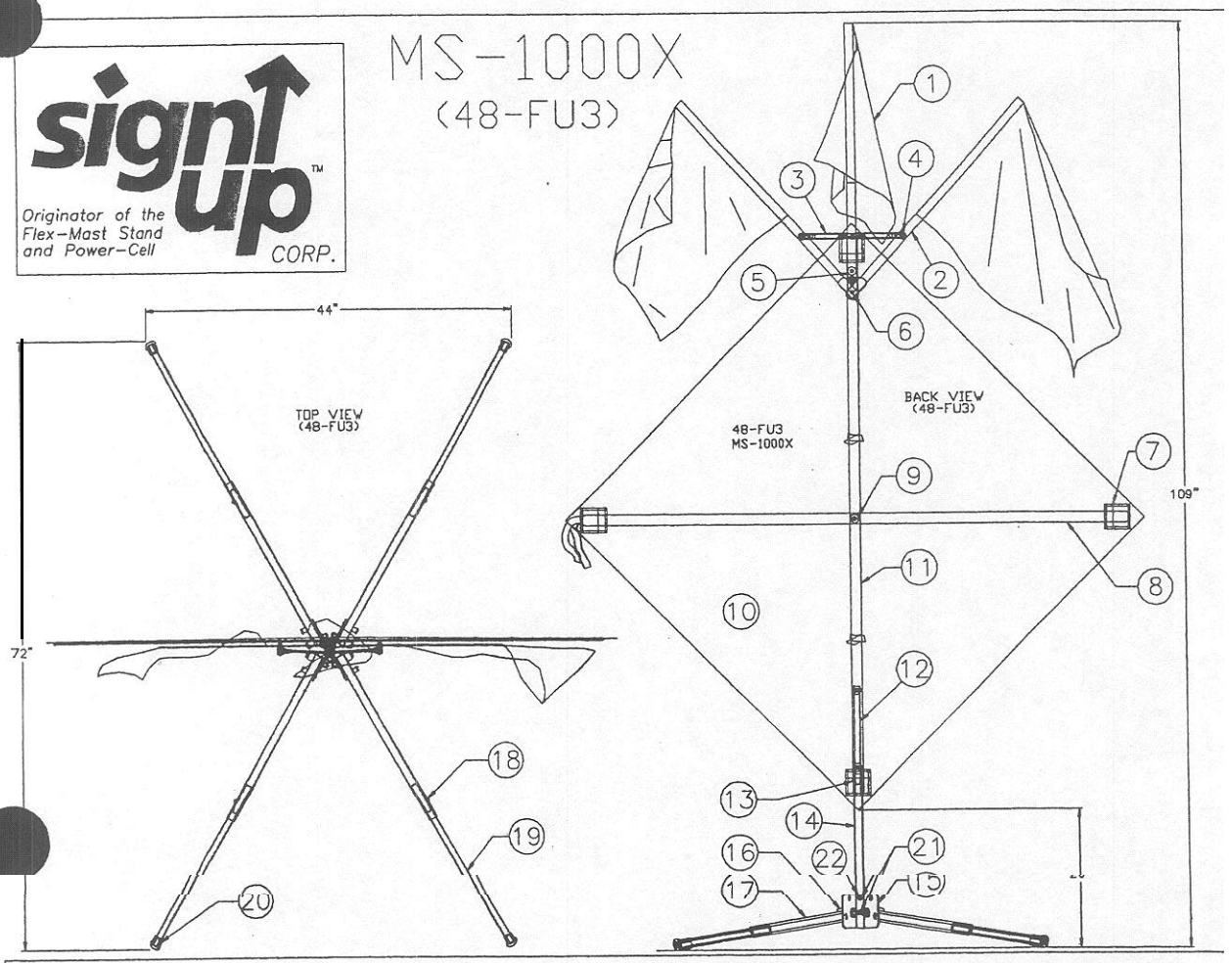

BILL OF MATERIALS

NO.	DESCRIPTIONS	QUANTITY
1	7 OZ X 18" SQ. VINYL FABRIC.	3
2	1/8" X 1" UNIDIRECTIONAL FIBERGLASS ISO POLYESTER RECTANGULAR BAR.	3
3	RUBBER STRETCH BAND.	1
4	5/16" X 3/4" SPRING PIN WITH 10/24" X 1 1/4" SLOT HEAD SCREW & LOCKNUT.	2
5	90 DUROMETER 3/4" X 1" URATHANE BUSHING WITH 1/4" X 1 1/4" SLOT HEAD SCREW & LOCKNUT.	1
6	10/24" X 1 1/4" SLOT HEAD SCREW WITH 10/24" LOCKNUT.	1
7	DOUBLED 18 OZ VINYL FABRIC POCKET.	4
8	3/16" X 1 1/4" X 64" UNIDIRECTIONAL FIBERGLASS REINFORCED ISO-POLYESTER RECTANGULAR BAR.	1
9	1/4" X 1" CAP SCREW WITH 1/4 X 1" STEEL FENDER WASHER & 1/4 LOCKNUT.	1
10	REFLEXITE VINYL FABRIC ROLL-UP SIGN 48" X 48".	1
11	5/16" X 1 1/4" X 64" LONG MAT./ROVING FIBERGLASS RECTANGULAR BAR.	1
12	.063" WALL X .750" SQ. X 12 3/4" LONG HRPO MILD STEEL TUBE.	1
13	1050 SPRING STEEL .0002 ZINC PLATED DETENT BUTTON.	1
14	.080" WALL X 1" SQ. X 18" LONG HRPO WITH MILD STEEL TUBE.	1
15	3/16" HRPO MILD STEEL PLATE.	2
16	90 DUROMETER URATHANE BUSHING W/STAINLESS STELL LEG SPRING & HRPO MILD STEEL PIN.	4
17	.080" WALL X 1" SQ. X 24" LONG HRPO MILD STEEL TUBE.	4
18	1050 SPRING STEEL DETENT BUTTON.	4
19	.060" WALL X .750" SQ. x 21" HRPO MILD STEEL TUBE.	4
20	# 19 SBR RUBBER END CAP WITH STEEL/ALUMINIUM BLIND RIVET.	4
21	3/8" DIA. X 2 1/4" BOLTS WITH LOCK NUT.	2
22	3/16" X 1 1/4" X 4" HRPO MILD STEEL SPACERS.	2

NOTE: ALL NUTS & BOLTS ARE GRADE 5.

signup™ CORP.

Originator of the Flex-Mast Stand and Power-Cell

MS-1000X
(4.8-MS22)

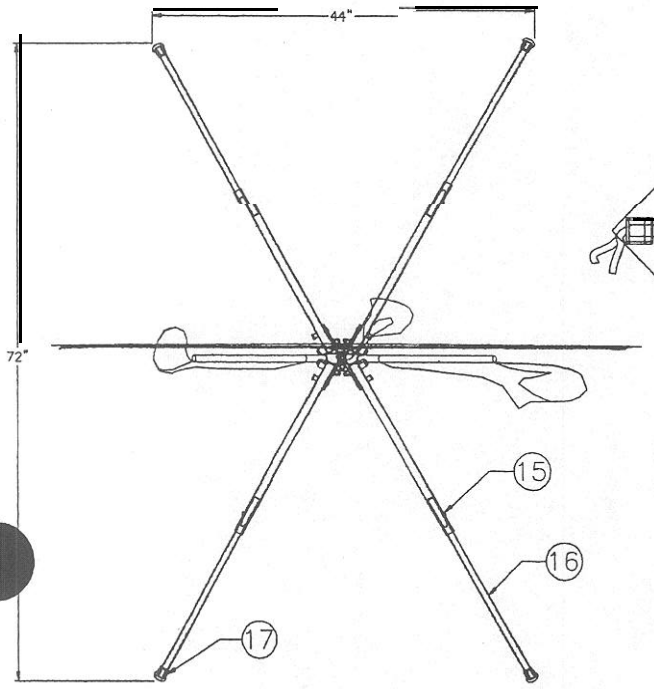

TOP VIEW
(48-MS22)

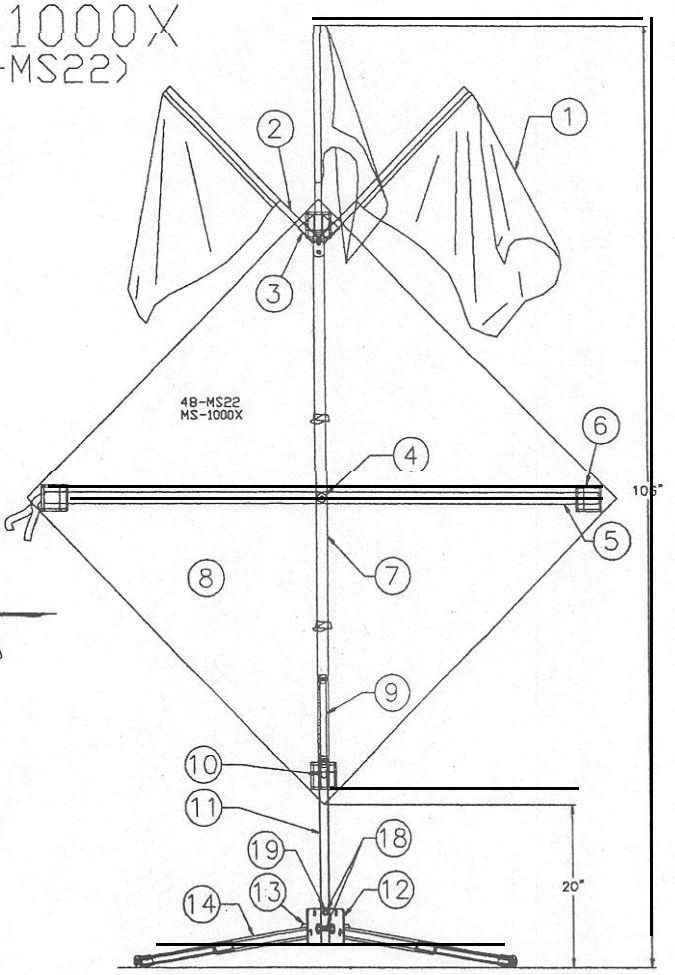

BACK VIEW
(48-MS22)

BILL OF MATERIALS

NO.	DESCRIPTIONS	QUANTI-
1	7 -OZX 18" so. VINYL FABRIC.	3
2	.750" DIA. HARDWOOD DOWELL.	3
3	14 GA HRPO MILD STEEL PLATE WITH .060" WALL X 1" ROUND MILD STEEL TUBING.	1
4	1/4" X 1" CAP SCREW WITH 1/4 X 1" STEEL FENDER WASHER & 1/4 LOCKNUT.	1
5	3/16" X 1 1/4" UNIDIRECTIONAL FIBERGLASS REINFORCED ISO-POLYESTER RECTANGULAR BAR.	1
6	DOUBLED 18 OZ VINYL FABRIC POCKET.	4
7	5/16" X 1 1/4" X 47 1/2" LONG MAT/ROVING FIBERGLASS RECTANGULAR BAR.	1
8	REFLEXITE VINYL FABRIC ROLL-UP SIGN 48" x 48".	1
9	.063" WALL X .750" SQ. X 12 3/4" LONG HRPO MILD STEEL TUBE.	1
10	1050 SPRING STEEL .0002 ZINC PLATED DETENT BUTTON.	1
11	.080" WALL X 1" SQ. X 18" LONG HRPO MILD STEEL TUBE.	1
12	3/16" HRPO MILD STEEL PLATE.	2
13	90 DUROMETER URATHANE BUSHING W/STAINLESS STELL LEG PRING & HRPO MILD STEEL PIN.	4
14	.080" WALL x 1" so. x 24" LONG HRPO MILD STEEL TUBE.	4
15	1050 SPRING STEEL DETENT BUTTON	4
16	.060" WALL x .750" SQ. x 21" HRPO MILD STEEL TUBE.	4
17	# 19 SBR RUBBER END CAP WITH STEE:/ALUMINIUM BLIND RIVET.	4
18	3/8" DIA. x 2 1/4" BOLTS WITH LOCK NUT.	2
19	3/16" x 1 1/4" x 4" HRPO MILD STEEL SPACERS.	2

NOTE: ALL NUTS & BOLTS ARE GRADE 5.

signT up™ CORP.
Originator of the FLEX-MAST Stand and Power-Cell

MS-1000X
(36-FU)

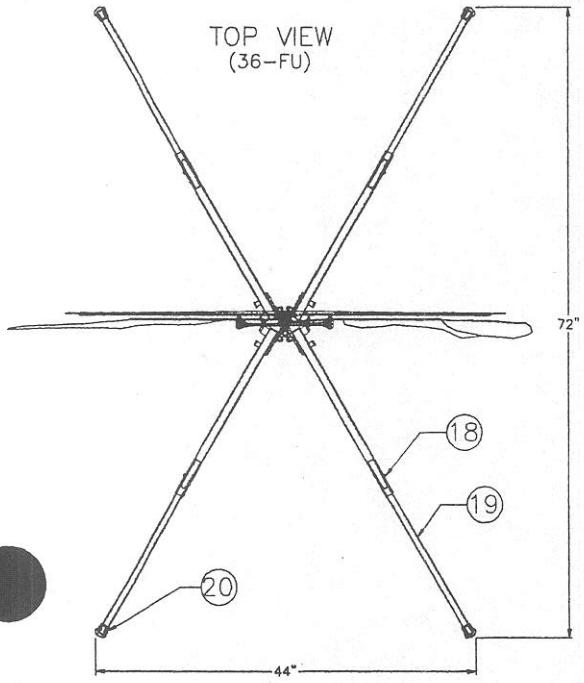

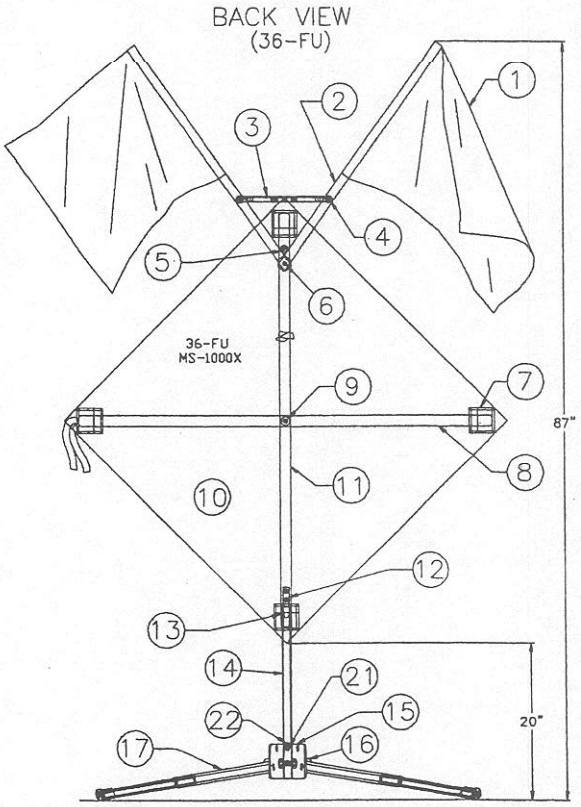

BILL OF MATERIALS		
NO.	DESCRIPTIONS	QUANTITY
1	7 OZ X 18" SQ. VINYL FABRIC.	2
2	1/8" X 1" UNIDIRECTIONAL FIBERGLASS ISO POLYESTER RECTANGULAR BAR.	2
3	RUBBER STRETCH BAND.	1
4	5/16" X 3/4" SPRING PIN WITH 10/24" X 1 1/4" SLOT HEAD SCREW & LOCKNUT.	2
5	90 DUROMETER 3/4"X 1" URATHANE BUSHING WITH 1/4"X 1 1/4" SLOT HEAD SCREW & LOCKNUT.	1
6	10/24" X 1 1/4" SLOT HEAD SCREEW WITH 10/24" LOCKNUT.	1
7	DOUBLED 18 OZ VINYL FABRIC POCKET.	4
8	3/16" X 1 1/4" UNIDIRECTIONAL FIBERGLASS REINFORCED ISO-POLYESTER RECTANGULAR BAR.	1
9	1/4" X 1" CAP SCREW WITH 1/4 X 1" STEEL FENDER WASHER & 1/4 LOCKNUT.	1
10	REFLEXITE VINYL FABRIC ROLL-UP SIGN 36" X 36".	1
11	5/16" X 1 1/4" X 47 1/2" LONG MAT./ROVING FIBERGLASS RECTANGULAR BAR.	1
12	.063" WALL X .750" SQ. X 4 1/2" LONG HRPO MILD STEEL TUBE.	1
13	1050 SPRING STEEL .0002 ZINC PLATED DETENT BUTTON.	1
14	.080" WALL X 1" SQ. X 18" LONG HRPO MILD STEEL TUBE.	1
15	3/16" HRPO MILD STEEL PLATE.	2
16	90 DUROMETER URATHANE BUSHING W/STAINLESS STELL LEG SPRING & HRPO MILD STEEL PIN.	4
17	.080" WALL X 1" SQ. X 24" LONG HRPO MILD STEEL TUBE.	4
18	1050 SPRING STEEL DETENT BUTTON.	4
19	.060" WALL X .750" SQ. x 21" HRPO MILD STEEL TUBE.	4
20	# 19 SBR RUBBER END CAP WITH STEEL/ALUMINIUM BLIND RIVET.	4
21	3/8" DIA. X 2 1/4" BOLTS WITH LOCK NUT.	2
22	3/16" X 1 1/4" X 4" HRPO MILD STEEL SPACERS.	2

NOTE: ALL NUTS & BOLTS ARE GRADE 5.

sign up™ CORP.

Originator of the Flex-Mast Stand and Power-Cell

MS-1000X
(36-FU3)

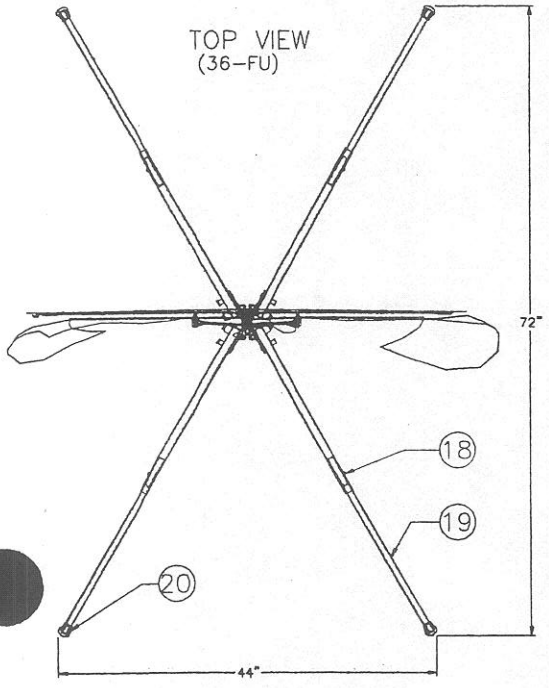

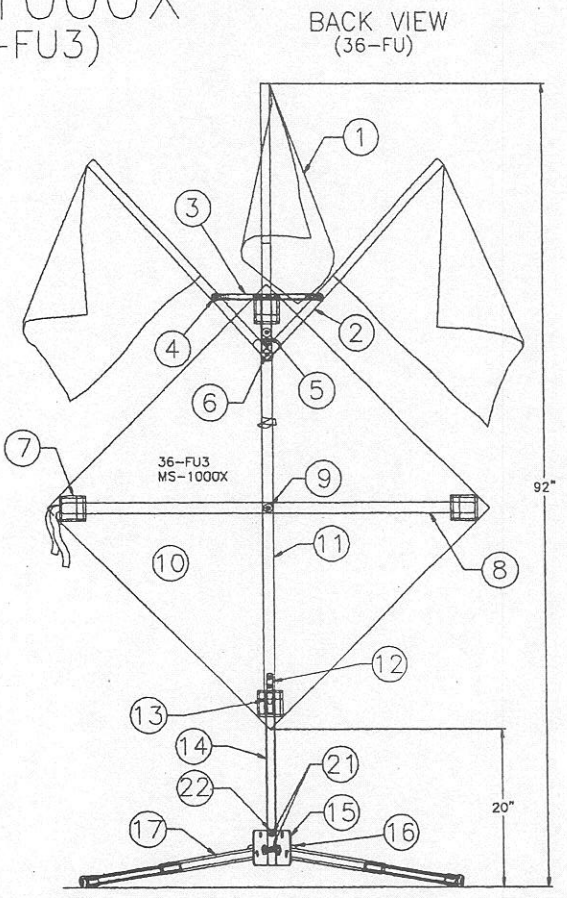

BILL OF MATERIALS		
NO.	DESCRIPTIONS	QUANTITY
1	7 OZ X 18" SQ. VINYL FABRIC.	3
2	1/8" X 1" UNIDIRECTIONAL FIBERGLASS ISO POLYESTER RECTANGULAR BAR.	3
3	RUBBER STRETCH BAND.	1
4	5/16" X 3/4" SPRING PIN WITH 10/24" X 1 1/4" SLOT HEAD SCREW & LOCKNUT.	2
5	90 DUROMETER 3/4" X 1" URATHANE BUSHING WITH 1/4" X 1 1/4" SLOT HEAD SCREW & LOCKNUT.	1
6	10/24" X 1 1/4" SLOT HEAD SCREW WITH 10/24" LOCKNUT.	1
7	DOUBLED 18 OZ VINYL FABRIC POCKET.	4
8	3/16" X 1 1/4" UNIDIRECTIONAL FIBERGLASS REINFORCED ISO-POLYESTER RECTANGULAR BAR.	1
9	1/4" X 1" CAP SCREW WITH 1/4 X 1" STEEL FENDER WASHER & 1/4 LOCKNUT.	1
10	REFLEXITE VINYL FABRIC ROLL-UP SIGN 36" X 36".	1
11	5/16" X 1 1/4" X 47 1/2" LONG MAT./ROVING FIBERGLASS RECTANGULAR BAR.	1
12	.063" WALL X .750" SQ. X 4 1/2" LONG HRPO MILD STEEL TUBE.	1
13	1050 SPRING STEEL .0002 ZINC PLATED DETENT BUTTON.	1
14	.080" WALL X 1" SQ. X 18" LONG HRPO MILD STEEL TUBE.	1
15	3/16" HRPO MILD STEEL PLATE.	2
16	90 DUROMETER URATHANE BUSHING W/STAINLESS STELL LEG SPRING & HRPO MILD STEEL PIN.	4
17	.080" WALL X 1" SQ. X 24" LONG HRPO MILD STEEL TUBE.	4
18	1050 SPRING STEEL DETENT BUTTON.	4
19	.060" WALL X .750" SQ. x 21" HRPO MILD STEEL TUBE.	4
20	# 19 SBR RUBBER END CAP WITH STEEL/ALUMINIUM BLIND RIVET.	4
21	3/8" DIA. X 2 1/4" BOLTS WITH LOCK NUT.	2
22	3/16" X 1 1/4" X 4" HRPO MILD STEEL SPACERS.	2

NOTE: ALL NUTS & BOLTS ARE GRADE 5.

MS-1000X
(36-MS22)

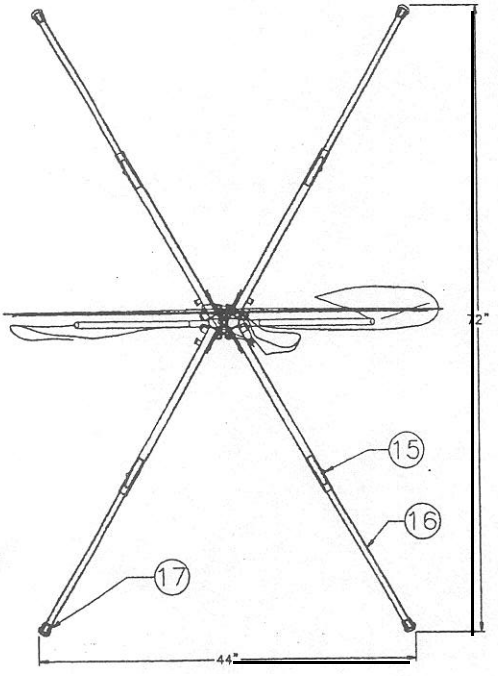

TOP VIEW (36-MS22)

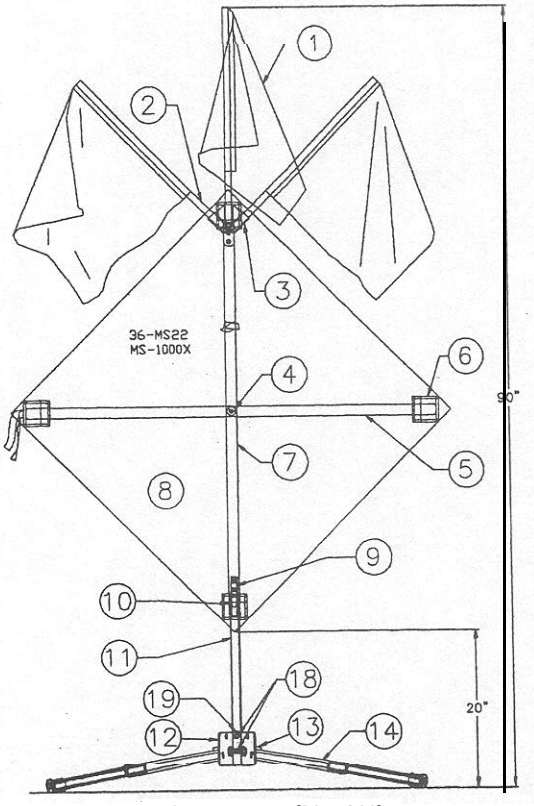

BACK VIEW (36-MS22)

BILL OF MATERIALS

NO.	DESCRIPTIONS	QUANTITY
1	7. 07 x 18" so. VINYL FABRIC.	3
2	.750" DIA. HARDOOD DOWEL.	3
3	14 GA HRPO MILD STEEL PLATE WITH .060" WALL X 1" ROUND MILD STEEL TUBING.	1
4	1/4" X 1" CAP SCREW WITH 1/4 X 1" STEEL FENDER WASHER & 1/ LOCKNUT.	1
5	3/16" X 1 1/4" UNIDIRECTIONAL FIBERGLASS REINFORCED ISO-POLYSTER RECTANGULAR BAR.	1
6	DOUBLED 18 OZ VINYL FABRIC POCKET.	
7	5/16" X 1 1/4" X 47 1/2" LONG MAT./ROVING FIBERGLASS RECTANGULAR BAR.	
8	REFLEXITE VINYL FABRIC ROLL UP SIGN 36" X 36"	1
9	.063" WALL X .750" SQ. X 4 1/2" LONG HRPO MILD STEEL TUBE.	1
10	1050 SPRING STEEL .0002 ZINC F	1
11	.080" WALL X 1" SQ. X 18" LONG HRPO	1
12	3/16" HRPO MIL STEEL PLATE.	2
13	90 DUROMETER URATHANE BUSHING W/STAINLESS STELL LEG SPRING & HRPO MILD STEEL PIN.	4
14	.080" WALL X 1" SQ. X 24" LONG HRPO MILD STEEL TUBE.	4
15	1050 SPRING Steel DETENT Button	4
16	.060" WALL X .750" SQ. X 21 HRPO MILD STEEL TUBE.	4
17	# 19 SBR RUBBER END CAP with STEEL/ALUMINIUM BLIND RIVET.	4
18	3/8" DIA. X 2 1/4" BOLS WITH LOCK NUT.	2
19	3/16" X 1 1/4" X 4" HRPO MILD STEEL SPACERS.	2

NOTE: ALL NUTS & BOLTS ARE GRADE 5.

signup™ CORP.

Originator of the Flex-Mast Stand and Power-Cell

MS-5000
(36-FU)

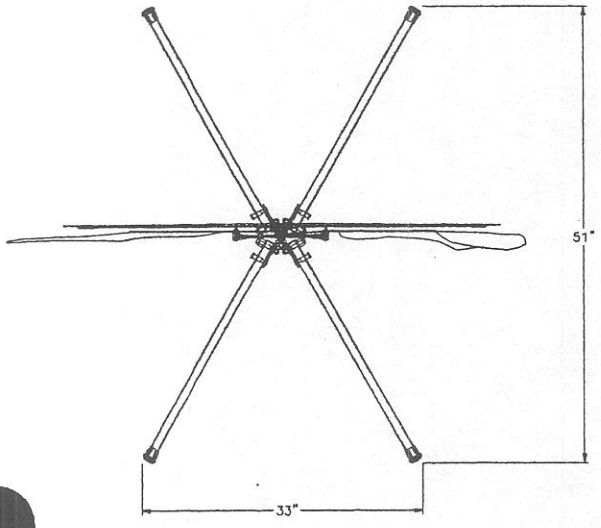

TOP VIEW
(36-FU/MS-5000)

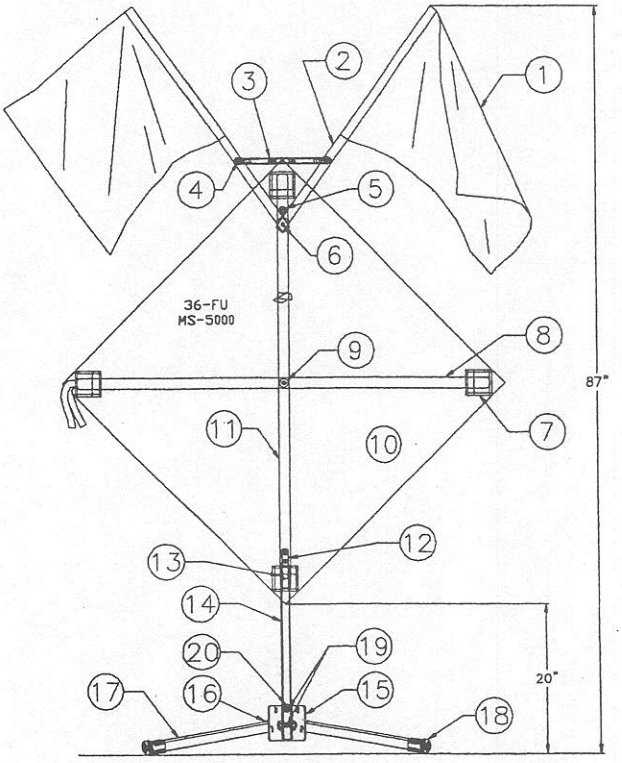

BACK VIEW
(36-FU/MS-5000)

BILL OF MATERIALS

NO.	DESCRIPTIONS	QUANTITY
1	7 OZ X 18" SQ. VINYL FABRIC.	2
2	1/8" X 1" UNIDIRECTIONAL & FIBERGLASS ISO POLYESTER RECTANGULAR BAR.	2
3	RUBBER STRETCH BAND.	1
4	5/16" X 3/4" SPRING PIN WITH 10/24" X 1 1/4" SLOT HEAD SCREW & LOCKNUT.	2
5	90 DUROMETER 3/4" X 1" URATHANE BUSHING WITH 1/4" X 1 1/4" SLOT HEAD SCREW & LOCKNUT.	1
6	10/24" X 1 1/4" SLOT HEAD SCREW WITH 10/24" LOCKNUT.	1
7	DOUBLED 18 OZ VINYL FABRIC POCKET.	4
8	3/16" X 1 1/4" UNIDIRECTIONAL FIBERGLASS REINFORCED ISO-POLYESTER RECTANGULAR BAR.	1
9	1/4" X 1" CAP SCREW WITH 1/4" X 1" STEEL FENDER WASHER & 1/4" LOCKNUT.	1
10	REFLEXITE VINYL FABRIC ROLL-UP SIGN 36" X 36".	1
11	5/16" X 1 1/4" X 47 1/2" LONG MAT./ROVING FIBERGLASS RECTANGULAR BAR.	1
12	.063 WALL X .750" SQ. X 4 1/2" LONG HRPO MILD STEEL TUBE.	1
13	1050 SPRING STEEL .0002 ZINC PLATED DETENT BUTTON.	1
14	.080" WALL X 1" SQ. X 18" LONG HRPO MILD STEEL TUBE.	1
15	3/16" HRPO MILD STEEL PLATE.	2
16	90 DUROMETER URATHANE BUSHING W/STAINLESS STEEL LEG SPRING WITH HRPO MILD STEEL PIN.	4
17	.080" WALL X 1" SQ. X 30" LONG HRPO MILD STEEL TUBE.	4
18	# 21 SBR RUBBER END CAP WITH STEEL/ALUMINIUM BLIND RIVET.	4
19	3/8" DIA. X 2 1/4" BOLTS WITH LOCK NUT.	2
20	3/16" X 1 1/4" X 4" HRPO MILD STEEL SPACERS.	2

NOTE: ALL NUTS & BOLTS ARE GRADE 5.

MS-5000
(36-FU3)

Originator of the Flex-Mast Stand and Power-Cell

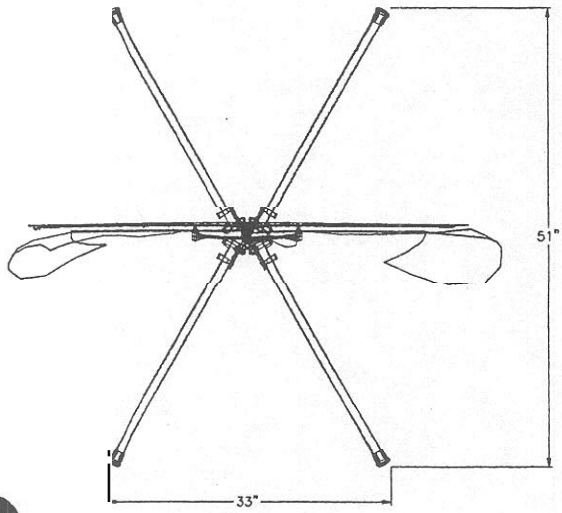

TOP VIEW
(36-FU3/MS-5000)

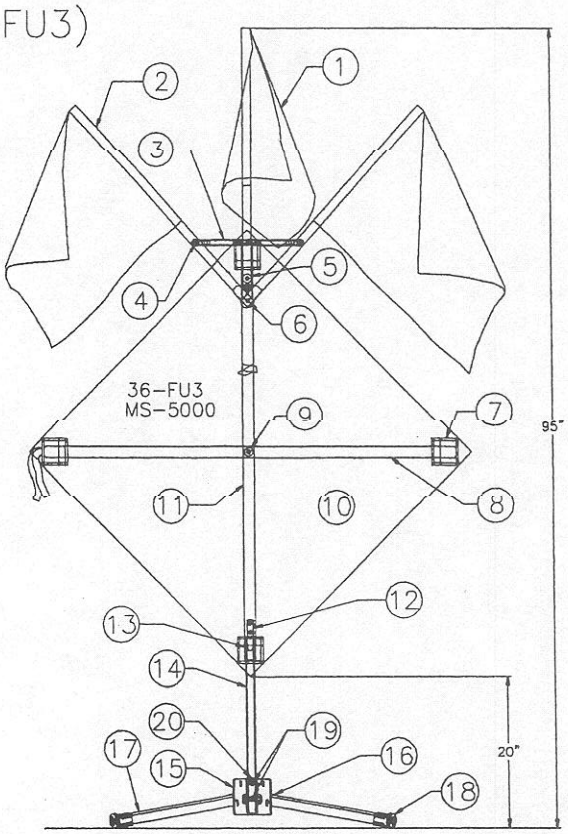

BACK VIEW
(36-FU3/MS-5000)

BILL OF MATERIALS

NO.	DESCRIPTIONS	QUANTITY
1	7 OZ X 18" SQ. VINYL FABRIC.	3
2	1/8" X 1" X 30" UNIDIRECTIONAL & FIBERGLASS ISO POLYESTER RECTANGULAR BAR.	3
3	RUBBER STRETCH BAND.	1
4	5/16" X 3/4" SPRING PIN WITH 10/24" X 1 1/4" SLOT HEAD SCREW & LOCKNUT.	2
5	90 DUROMETER 3/4" X 1" URATHANE BUSHING WITH 1/4" X 1 1/4" SLOT HEAD SCREW & LOCKNUT.	1
6	10/24" X 1 1/4" SLOT HEAD SCREW WITH 10/24" LOCKNUT.	1
7	DOUBLED 18 OZ VINYL FABRIC POCKET.	4
8	3/16" X 1 1/4" UNIDIRECTIONAL & FIBERGLASS REINFORCED ISO-POLYESTER RECTANGULAR BAR.	1
9	1/4" X 1" CAP SCREW WITH 1/4" X 1" STEEL FENDER WASHER & 1/4" LOCKNUT.	1
10	REFLEXITE VINYL FABRIC ROLL-UP SIGN 36" X 36".	1
11	5/16" X 1 1/4" X 47 1/2" LONG MAT./ROVING FIBERGLASS RECTANGULAR BAR.	1
12	.063 WALL X .750" SQ. X 4 1/2" LONG HRPO MILD STEEL TUBE.	1
13	1050 SPRING STEEL .0002 ZINC PLATED DETENT BUTTON.	1
14	.080" WALL X 1" SQ. X 18" LONG HRPO MILD STEEL TUBE.	1
15	3/16" HRPO MILD STEEL PLATE.	2
16	90 DUROMETER URATHANE BUSHING W/STAINLESS STEEL LEG SPRING+HRPO MILD STEEL PIN.	4
17	.080" WALL X 1" SQ. X 30" LONG HRPO MILD STEEL TUBE.	4
18	# 21 SBR RUBBER END CAP WITH STEEL/ALUMINIUM BLIND RIVET.	4
19	3/8" DIA. X 2 1/4" BOLTS WITH LOCK NUT.	2
20	3/16" X 1 1/4" X 4" HRPO MILD STEEL SPACERS.	2

NOTE: ALL NUTS & BOLTS ARE GRADE 5.

MS-5000

Originator of the Flex-Mast Stand and Power-Cell

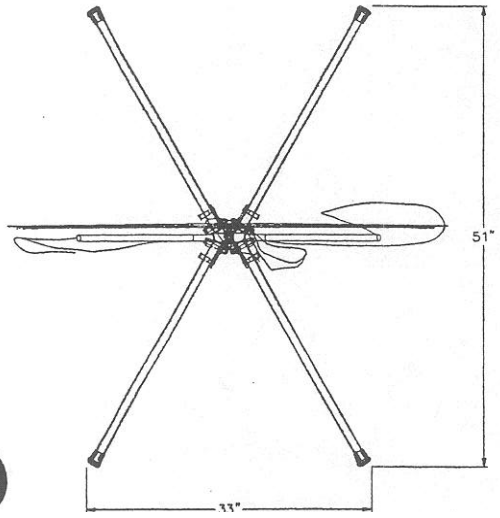

TOP VIEW
(364522/M' ;-5000)

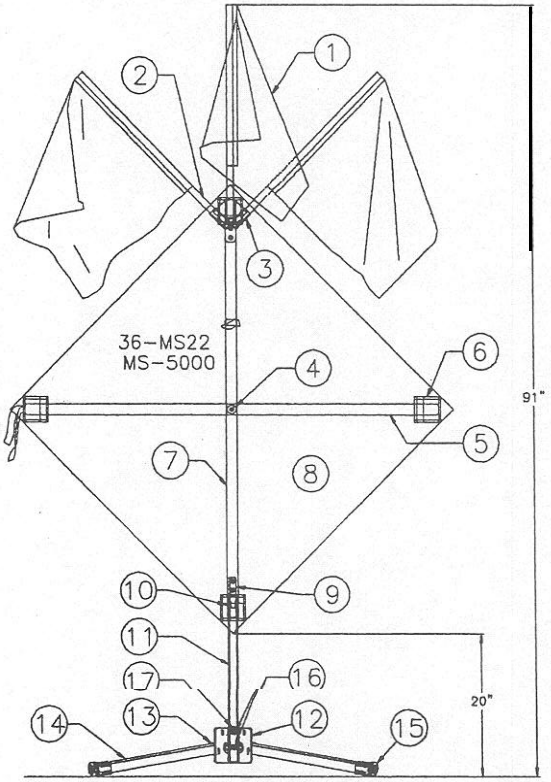

BACK VIEW
(36-MS22/MS-5000)

BILL OF MATERIALS

NO.	DESCRIPTIONS	QUANTITY
1	7 OZ X 18" SQ. VINYL FABRIC.	3
2	.750" DIA. HARDWOOD DOWELL.	3
3	14 GA HRPO MILD STEEL PLATE WITH .060" WALL X 1" ROUND MILD STEEL TUBING.	1
4	1/4" X 1" CAP SCREW WITH 1/4 X 1" STEEL FENDER WASHER & 1/4 LOCKNUT.	1
5	3/16" X 1 1/4" UNIDIRECTIONAL FIBERGLASS REINFORCED ISO-POLYESTER RECTANGULAR BAR.	1
6	DOUBLED 18 OZ VINYL FABRIC POCKET.	4
7	5/16" X 1 1/4" X 47 1/2" LONG MAT./ROVING FIBERGLASS RECTANGULAR BAR.	1
8	REFLEXITE VINYL FABRIC ROLL-UP SIGN 36" X36".	1
9	.063" WALL X .750" SQ. X 4 1/2" LONG HRPO MILD STEEL TUBE.	1
10	1050 SPRING STEEL .0002 ZINC PLATED DETENT BUTTON.	1
11	.080" WALL X 1" SQ. X 18" LONG HRPO MILD STEEL TUBE.	1
12	3/16" HRPO MILD STEEL PLATE.	2
13	90 DUROMETER URATHANE BUSHING W/STAINLESS STELL LEG SPRING & HRPO MILD STEEL PIN.	4
14	.080" WALL X 1" SQ. X 30" LONG HRPO MILD STEEL TUBE.	4
15	# 21 SBR RUBBER END CAP WITH STEEL/ALUMINIUM BLIND RIVET.	4
16	3/8" DIA. X 2 1/4" BOLTS WITH LOCK NUT.	2
17	3/16" X 1 1/4" X 4" HRPO MILD STEEL SPACERS.	2

NOTE: ALL NUTS & BOLTS ARE GRADE 5.

percent) of the total contract cost or $2,500, whichever is greater. For purposes of this paragraph, the cost is that shown to be the value of the steel and iron products as they are delivered to the project.

(c)(1) A State may request a waiver of the provisions of this section if;

(i) The application of those provisions would be inconsistent with the public interest; or

(ii) Steel and iron materials/products are not produced in the United States in sufficient and reasonably available quantities which are of a satisfactory quality.

(2) A request for waiver, accompanied by supporting information, must be submitted in writing to the Regional Federal Highway Administrator (RFHWA) through the FHWA Division Administrator. A request must be submitted sufficiently in advance of the need for the waiver in order to allow time for proper review and action on the request. The RFHWA will have approval authority on the request.

(3) Requests for waivers may be made for specific projects, or for certain materials or products in specific geographic areas, or for combinations of both, depending on the circumstances.

(4) The denial of the request by the RFHWA may be appealed by the State to the Federal Highway Administrator (Administrator), whose action on the request shall be considered administratively final.

(5) A request for a waiver which involves nationwide public interest or availability issues or more than one FHWA region may be submitted by the RFHWA to the Administrator for action.

(6) A request for waiver and an appeal from a denial of a request must include facts and justification to support the granting of the waiver. The FHWA response to a request or appeal will be in writing and made available to the public upon request. Any request for a nationwide waiver and FHWA's action on such a request may be published in the FEDERAL REGISTER for public comment.

(7) In determining whether the waivers described in paragraph (c)(1) of this section will be granted, the FHWA will consider all appropriate factors including, but not limited to, cost, administrative burden, and delay that would be imposed if the provision were not waived.

(d) Standard State and Federal-aid contract procedures may be used to assure compliance with the requirements of this section.

[48 FR 53104, Nov. 25, 1983, as amended at 49 FR 18821, May 3, 1984; 58 FR 38975, July 21, 1993]

EDITORIAL NOTE: For a waiver document affecting § 635.410, see 60 FR 15478, Mar. 24, 1995.

§ 635.411 Material or product selection.

(a) Federal funds shall not participate, directly or indirectly, in payment for any premium or royalty on any patented or proprietary material, specification, or process specifically set forth in the plans and specifications for a project, unless:

(1) Such patented or proprietary item is purchased or obtained through competitive bidding with equally suitable unpatented items; or

(2) The State highway agency certifies either that such patented or proprietary item is essential for synchronization with existing highway facilities, or that no equally suitable alternate exists; or

(3) Such patented or proprietary item is used for research or for a distinctive type of construction on relatively short sections of road for experimental purposes.

(b) When there is available for purchase more than one nonpatented, nonproprietary material, semifinished or finished article or product that will fulfill the requirements for an item of work of a project and these available materials or products are judged to be of satisfactory quality and equally acceptable on the basis of engineering analysis and the anticipated prices for the related item(s) of work are estimated to be approximately the same, the PS&E for the project shall either contain or include by reference the specifications for each such material or product that is considered acceptable for incorporation in the work. If the State highway agency wishes to substitute some other acceptable material or product for the material or product designated by the successful bidder or

bid as the lowest alternate, and such substitution results in an increase in costs, there will not be Federal-aid participation in any increase in costs.

(c) A State highway agency may require a specific material or product when there are other acceptable materials and products, when such specific choice is approved by the Division Administrator as being in the public interest. When the Division Administrator's approval is not obtained, the item will be nonparticipating unless bidding procedures are used that establish the unit price of each acceptable alternative. In this case Federal-aid participation will be based on the lowest price so established.

(d) Appendix A sets forth the FHWA requirements regarding (1) the specification of alternative types of culvert pipes, and (2) the number and types of such alternatives which must be set forth in the specifications for various types of drainage installations.

(e) Reference in specifications and on plans to single trade name materials will not be approved on Federal-aid contracts.

§ 635.413 Warranty clauses.

The SHA may include warranty provisions in National Highway System (NHS) construction contracts in accordance with the following:

(a) Warranty provisions shall be for a specific construction product or feature. Items of maintenance not eligible for Federal participation shall not be covered.

(b) All warranty requirements and subsequent revisions shall be submitted to the Division Administrator for advance approval.

(c) No warranty requirement approved which, in the judgme Division Administrator, may undue obligation on the contr items over which the contract control.

(d) A SHA may follow its ov dures regarding the inclusion ranty provisions in non-NHS aid contracts.

[60 FR 44274, Aug. 25, 1995]

§ 635.417 Convict produced m

(a) Materials produced afte 1991, by convict labor may on corporated in a Federal-aid construction project if such have been:

(1) Produced by convicts wh parole, supervised release, or from a prison or

(2) Produced in a qualified cility and the cumulative an duction amount of such mat use in Federal-aid highway tion does not exceed the ar such materials produced in s ity for use in Federal-aid high struction during the 12-mont ending July 1, 1987.

(b) *Qualified prison facility* m prison facility in which convi ing the 12-month period endin 1987, produced materials for us eral-aid highway construction

[53 FR 1923, Jan. 25, 1988, as ame FR 38975, July 21, 1993]

APPENDIX A TO SUBPART D 635—SUMMARY OF ACCEPTA TERIA FOR SPECIFYING T CULVERT PIPES

Type of drainage installation	Alternatives required			AASHTO designations to be included with alternatives	Application	
	Yes	No	Number			
Cross drains under high-type pavement.[1]	.....	X	.....	.....	Statewide	Any A prov
Other cross-drain installations.	X	.....	3 minimum	M-170 and M-190.	.....do	D
Side-drain installations	X	.....	.....do	M-36	.....do	D
Special installation conditions.	.....	X	.....	.....	Individual installation.	Speci spe tion
Special drainage systems (storm sewers, inverted siphons, etc.).	.....	X	.....	.....	.....do	Speci site mer

[1] High-type pavement is generally described as FHWA construction type codes I, J, K, L t mix and pe adam segments, respectively shown in the right-hand columns of type codes G and H ha nbined thickn and base of 7 in or more (or equivalent) or that are constructed on rigid bases.