U.S. Department
of Transportation
**Federal Highway
Administration**

1200 New Jersey Ave., SE
Washington, D.C. 20590

July 10, 2014

In Reply Refer To:
HSST/B-231 Revised

Mr. Scott Rosenbaugh
Research Associate Engineer
Midwest Roadside Safety Facility UNL
2200 Vine Street
130 Whittier Building
Lincoln NE, 68583-0853

Dear Mr. Rosenbaugh:

This letter is in response to your request for revisions to the existing eligibility letter B-231 dated January 27, 2012, and for the Federal Highway Administration (FHWA) to review a roadside safety system for eligibility for reimbursement under the Federal-aid highway program.

Name of system:	Transition from steel post MGS to thrie-beam approach
Type of system:	W-beam to thrie-beam stiffness transition
Test Level:	MASH Test Level 3
Testing conducted by:	Midwest Roadside Safety Facility
Task Force 13 Designator:	STG03a
Date of original request:	June 28, 2011
Date of revision request:	April 10, 2014

Decision:
The following device is eligible, with details provided in your letter of June 28, 2011, which is enclosed as an integral part of this finding:

- Stiffness Transition from steel post MGS with 12-inch deep blockouts to thrie-beam approach using asymmetrical "Y."

Based on a review of submitted revisions to existing eligibility letter B-231 dated January 27, 2012 and to crash test results submitted by the manufacturer certifying the device described herein meets the crashworthiness criteria of the American Association of State Highway and Transportation Officials' Manual for Assessing Safety Hardware (MASH), the device is eligible for reimbursement under the Federal-aid highway program. Eligibility for reimbursement under the Federal-aid highway program does not establish approval or endorsement by the FHWA for any particular purpose or use.

The FHWA, the Department of Transportation, and the United States Government do not endorse products or services and the issuance of a reimbursement eligibility letter is not an endorsement of any product or service.

Requirements
Roadside safety devices should meet the guidelines contained in the MASH.

Description and Crash Testing
Guardrail to bridgerail transitions are designed to gradually increase the stiffness of the semi-rigid w-beam barrier until connected to the rigid bridge railing. Typically, a single critical impact point (CIP) has been evaluated with full-scale crash testing. That CIP is usually located at the point where we anticipate the greatest likelihood of vehicle snagging or pocketing near the beginning of the rigid bridge railing. Because the stiffness of the barrier transition hardware needed to adequately shield the end of the rigid bridge railing is substantial, there is also reason to determine if the change in stiffness between the w-beam guardrail and the transition design itself is safe. A transition from the MGS with 12-inch deep blockout to a stiffened thrie-beam rail using an asymmetrical "Y" transition piece was evaluated in your crash testing. The enclosed letter describes the transition design and the two crash tests conducted.

Also enclosed are the test data summary sheets and drawings of the transitions.

Findings
Therefore, the system described and detailed in the attached letter, including the various attachment alternatives, is eligible for reimbursement and may be installed under the range of conditions tested.

Please note the following standard provisions that apply to FHWA eligibility letters:

- This letter provides a AASHTO/ARTBA/AGC Task Force 13 designator that should be used for the purpose of the creation of a new and/or the update of existing Task Force 13 drawing for posting on the on-line 'Guide to Standardized Highway Barrier Hardware' currently referenced in AASHTO Roadside Design Guide.
- This finding of eligibility is limited to the crashworthiness characteristics of the systems and does not cover their structural features, nor conformity with the Manual on Uniform Traffic Control Devices.
- Any changes that may influence the crashworthiness of the system will require a new reimbursement eligibility letter.
- Should the FHWA discover that the qualification testing was flawed, that in-service performance reveals safety problems, or that the system is significantly different from the version that was crash tested, we reserve the right to modify or revoke this letter.
- You will be expected to supply potential users with sufficient information on design and installation requirements to ensure proper performance.
- You will be expected to certify to potential users that the hardware furnished has the same chemistry, mechanical properties, and geometry as that submitted for review, and that it will meet the crashworthiness requirements of the Manual for Assessing Safety Hardware.

- To prevent misunderstanding by others, this letter of eligibility is designated as number B-231 Revised and shall not be reproduced except in full. This letter and the test documentation upon which it is based are public information. All such letters and documentation may be reviewed at our office upon request.
- This letter shall not be construed as authorization or consent by the FHWA to use, manufacture, or sell any patented system for which the applicant is not the patent holder. The finding of eligibility is limited to the crashworthiness characteristics of the candidate system, and the FHWA is neither prepared nor required to become involved in issues concerning patent law. Patent issues, if any, are to be resolved by the applicant.

Sincerely yours,

Michael S. Griffith

Michael S. Griffith
Director, Office of Safety Technologies
Office of Safety

June 28, 2011

Mr. Nicholas A. Artimovich
Highway Engineer
Federal Highway Administration - HSSD
Office of Safety Design
Room E71-322
1200 New Jersey Avenue, SE
Washington, D.C. 20590
(202) 366-1331 phone

Subject: Application for Federal Highway Administration (FHWA) acceptance of a guardrail stiffness transition from Midwest Guardrail System (MGS) to thrie beam approach transitions.

Dear Mr. Artimovich:

I have enclosed documentation on the compliance testing and evaluation of a longitudinal barrier system by the Midwest Roadside Safety Facility (MwRSF) at the University of Nebraska-Lincoln. In this research project, a stiffness transition was developed between the Midwest Guardrail System (MGS) and a stiff thrie beam approach transition system utilizing an asymmetric W-to-Thrie guardrail element. The stiffness transition was successfully crash tested according to Test Level-3 (TL-3) requirements provided in the *Manual for Assessing Safety Hardware* (MASH). A final MwRSF research report has been prepared for this barrier system:

> ***Development of the MGS Approach Guardrail Transition Using Standard Steel Posts***
> MwRSF Research Report No. TRP-03-210-10, December 21, 2010

Please note that a similar stiffness transition system was developed utilizing the asymmetric W-to-Thrie guardrail element and multiple steel post sizes. This previous stiffness transition system was shown to meet the TL-3 requirements provided in NCHRP Report No. 350 and has been accepted by the Federal Highway Administration (FHWA) in Letter No. B-187, dated February 13, 2009.

According to TL-3 guidelines contained in MASH, longitudinal barrier systems should be subjected to two full-scale crash test: (1) test designation no. 3-10 consisting of a 2,425-lb passenger vehicle impacting at 62.1 mph and 25 degrees and (2) test designation no. 3-11 consisting of a 5,000-lb pickup truck impacting at 62.1 mph and 25 degrees. The newly developed stiffness transition satisfied the MASH safety performance requirements for both of these full-scale crash tests, as documented in test nos. MWTSP-2 and MWTSP-3. Documentation of the compliance testing and analysis is contained within the CD-ROM and hard copy file enclosures listed at the end of this letter.

The upstream, W-to-thrie stiffness transition was developed and crash tested adjacent to a stiff, thrie beam, approach guardrail transition system originally developed for Missouri's thrie beam and channel bridge rail. This approach guardrail transition was selected as the critical system because it was one of the stiffest approach transitions used by members of the Midwest Pooled Fund States. Due to the successful crash testing and evaluation program, it is believed that the upstream stiffness transition can be adapted to other steel post, thrie beam approach transitions. Chapter 14 of the report documents recommended attachments to the approach guardrail transitions used by members of the Pooled Fund States and listed below. Adaptations to other systems can be accomplished in a similar manner by matching rail segments and post strengths. It should be noted that the original approach guardrail transitions should only be used in conjunction with the bridge rail types for which they were designed, tested, or approved.

System: Missouri Transition to Thrie Beam and Channel Bridge Rail
Report: *Development of an Approach Guardrail Transition Attached to a Thrie Beam and Channel Bridge Rail*, Report No. TRP-03-91-99
FHWA Acceptance Letter: Dated June 4, 1999
Adaptation: See Figure 92 on Page 163 of the Report

System: Missouri Transition to Single Slope Median Barrier
Report: *Development and Testing of an Approach Guardrail Transition to a Single Slope Concrete Median Barrier*, Report No. TRP-03-47-95
Adaptation: See Figure 93 on Page 164 of the Report

System: Nebraska Transition to Vertical Face Concrete Parapet
Report: *NCHRP 350 Test3-21 of the Nebraska Thrie Beam Transition*, May 2000
FHWA Acceptance Letter: B-105
Adaptation: See Figure 94 on Page 165 of the Report

System: Thrie Beam and Tube Bridge Rail
Report: *Two Test Level 4 Bridge Railing and Transition Systems for Transverse Glue-Laminated Timber Decks*, Report No. TRP-03-71-01
FHWA Acceptance Letter: B-138
Adaptation: See Figure 95 on Page 166 of the Report

System: Iowa Transition to Safety Shape Concrete Parapet
Report: Two Approach Guardrail Transitions for Concrete Safety Shape Barriers
FHWA Acceptance Letter: B-47 and B-47A
Adaptation: See Figure 96 on Page 167 of the Report

On behalf of the Midwest States Pooled Fund Program, MwRSF is requesting that the FHWA accept the use of the MGS stiffness transition utilizing an asymmetric W-to-thrie guardrail element for roadside use along Federal-aid highways.

If you have any questions regarding the enclosed information or need any other information, please feel free to contact either Mr. Rosenbaugh [(402) 472-9324 or srosenba@unlserve.unl.edu] or Dr. Faller [(402) 472-6864 or rfaller1@unl.edu] at your earliest convenience.

Sincerely,

Scott Rosenbaugh, MSCE, EIT
Research Associate Engineer

Ronald K. Faller, Ph.D., P.E.
Research Assistant Professor

Enclosures:
(1) two copies of MwRSF research report no. TRP-03-210-10
(2) one CD-ROM set documenting the full-scale crash test
(3) one CD-ROM with electronic drawing and PDF report files
(4) one hard copy of CAD system drawings

0.000 sec | 0.066 sec | 0.112 sec | 0.240 sec | 0.330 sec

- Test Agency ..... MwRSF
- Test Number MWTSP-3
- Date 10/9/08
- MASH Test Designation 3-20
- Test Article ..... Stiffness Transition between MGS and Thrie Beam Transition
- Total Length ..... 87 ft - 6 in. (26.7 m)
- Height to Top of Rail ..... 31 in. (787 mm)
- Key Components – Steel W-Beam Guardrail
  - Thickness ..... 12 gauge (2.66 mm)
- Key Components – Steel W-Beam to Thrie Beam Transition
  - Thickness ..... 10 gauge (3.42 mm)
  - Segment Length ..... 75 in. (1,905 mm)
- Key Components – Steel Thrie Beam
  - Thickness ..... 12 gauge (2.66 mm)
- Key Components – Steel Posts
  - Post Nos. 3 - 15 ..... 72 in. (1,829 mm) long W6x9 (W152x13.4)
  - Post Nos. 16 - 18 ..... 84 in. (2,134 mm) long W6x15 (W152x22.3)
  - Post Nos. 19 - 21 ..... $29^{5}/_{8}$ in. (752 mm) long W6x20 (W152x29.8)
- Post Spacing
  - Post Nos. 1 - 8, 19 - 21 ..... 75 in. (1,905 mm)
  - Post Nos. 8 - 12, 16 - 19 ..... $37^{1}/_{2}$ in. (953 mm)
  - Post Nos. 12 - 16 ..... $18^{3}/_{4}$ in. (476 mm)
- Type of Soil ..... Grading B – AASHTO M 147-65
- Vehicle
  - Make and Model ..... 2002 Kia Rio
  - Curb ..... 2,399 lb (1,088 kg)
  - Test Inertial ..... 2,394 lb (1,086 kg)
  - Gross Static ..... 2,591 lb (1,175 kg)
- Impact Conditions
  - Speed ..... 61.0 mph (98.2 km/h)
  - Angle ..... 25.7 deg
  - Impact Location ..... 93¾ in. (2,381 mm) US of Post No. 9
- Exit Conditions
  - Speed ..... 5.8 mph (9.4 km/h)
  - Angle ..... 68.7 deg
- Vehicle Stability ..... Satisfactory
- Exit Box Criterion ..... NA
- Vehicle Damage ..... Moderate
  - VDS[28] 1-RFQ-5
  - CDC[29] 01-RFEW2

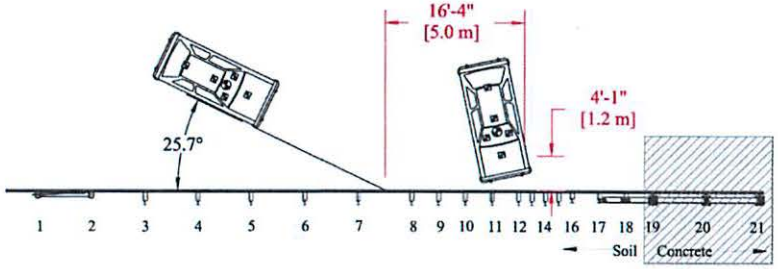

- Vehicle Stopping Distance ..... 16 ft (4.9 m) DS of Impact
  4.1 ft (1.2 m) in front of the system
- Test Article Damage ..... Moderate
- Test Article Deflections
  - Permanent Set ..... 15.6 in. (396 mm)
  - Dynamic ..... 18.5 in. (470 mm)
  - Working Width ..... 39.8 in. (1,011 mm)
- Maximum Angular Displacements
  - Roll ..... 6.9° < 75°
  - Pitch ..... -4.2° < 75°
  - Yaw ..... 60.7°
- Impact Severity ..... 60.6 kip-ft (82.2 kJ) > 51.0 kip-ft (69.7 kJ)
- Transducer Data

Evaluation Criteria		Transducer			MASH Limit
		EDR-3	EDR-4	DTS	
OIV ft/s (m/s)	Longitudinal	-27.55 (-8.40)	NA	-25.62 (-7.81)	≤ 40 (12.2)
	Lateral	-17.05 (-5.20)	NA	-18.61 (-5.67)	≤ 40 (12.2)
ORA g's	Longitudinal	-14.70	NA	-13.70	≤ 20.49
	Lateral	-5.76	NA	-6.74	≤ 20.49
THIV – ft/s (m/s)		-	NA	30.12 (9.18)	not required
PHD – g's		-	NA	14.25	not required
ASI		1.11	NA	1.13	not required

Figure 79. Summary of Test Results and Sequential Photographs, Test No. MWTSP-3

0.000 sec | 0.072 sec | 0.184 sec | 0.246 sec | 0.506 sec

- Test Agency ..... MwRSF
- Test Number MWTSP-2
- Date 7/7/08
- MASH Test Designation 3-21
- Test Article ..... Stiffness Transition between MGS and Thrie Beam Transition
- Total Length ..... 87 ft – 6 in. (26.7 m)
- Height to Top of Rail ..... 31 in. (787 mm)
- Key Components – Steel W-Beam Guardrail
  - Thickness ..... 12 gauge (2.66 mm)
- Key Components – Steel W-Beam to Thrie Beam Transition
  - Thickness ..... 10 gauge (3.42 mm)
  - Segment Length ..... 75 in. (1,905 mm)
- Key Components – Steel Thrie Beam
  - Thickness ..... 12 gauge (2.66 mm)
- Key Components – Steel Posts
  - Post Nos. 3 - 15 ..... 72 in. (1,829 mm) long, W6x9 (W152x13.4)
  - Post Nos. 16 - 18 ..... 84 in. (2,134 mm) long, W6x15 (W152x22.3)
  - Post Nos. 19 - 21 ..... 29 $^{1}/_{4}$ in. (752 mm) long, W6x20 (W152x29.8)
- Post Spacing
  - Post Nos. 1 - 8, 19 - 21 ..... 75 in. (1,905 mm)
  - Post Nos. 8 - 12, 16 - 19 ..... 37 $^{1}/_{2}$ in. (953 mm)
  - Post Nos. 12 - 16 ..... 18¾ in. (476 mm)
- Type of Soil ..... Grading B – AASHTO M 147-65
- Vehicle
  - Make and Model ..... 2002 Dodge Ram 1500 Quad Cab
  - Curb ..... 5,138 lb (2,331 kg)
  - Test Inertial ..... 4,993 lb (2,265 kg)
  - Gross Static ..... 5,158 lb (2,340 kg)
- Impact Conditions
  - Speed ..... 61.2 mph (98.5 km/h)
  - Angle ..... 26.3 deg
  - Impact Location ..... 75 in. (1,905 mm) US of Post No. 9
- Exit Conditions
  - Speed ..... 37.3 mph (60.0 km/h)
  - Angle ..... 22.0 deg
- Vehicle Stability ..... Satisfactory
- Exit Box Criteria ..... Passed
- Vehicle Damage ..... Moderate
  - VDS[29] 1-RFQ-5
  - CDC[29] 01-RFEW2

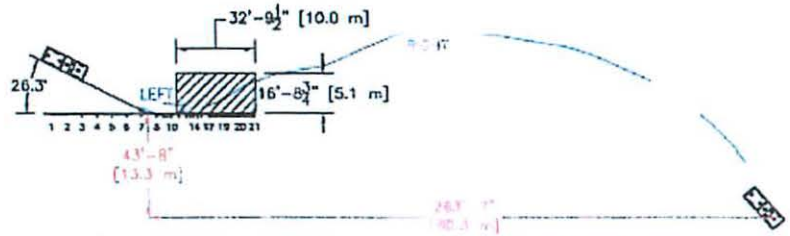

- Vehicle Stopping Distance ..... 263 ft (80.2 m) DS of Impact
  43.7 ft (13.3 m) Laterally Behind the System
- Test Article Damage ..... Moderate
- Test Article Deflections
  - Permanent Set ..... 25¾ in. (654 mm)
  - Dynamic ..... 32.8 in. (833 mm)
  - Working Width ..... 51.6 in. (1,310 mm)
- Maximum Angular Displacements
  - Roll ..... 13° < 75°
  - Pitch ..... 10° < 75°
  - Yaw ..... 51°
- Impact Severity ..... 126.8 kip-ft (171.9 kJ) > 106 kip-ft (144 kJ)
- Transducer Data

Evaluation Criteria		Transducer			MASH Limit
		EDR-3	EDR-4	DTS	
OIV ft/s (m/s)	Longitudinal	-21.21 (-6.46)	NA	NA	≤ 40 (12.2)
	Lateral	-16.91 (-5.15)	NA	NA	≤ 40 (12.2)
ORA g's	Longitudinal	-12.03	NA	NA	≤ 20.49
	Lateral	-9.87	NA	NA	≤ 20.49
THIV – ft/s (m/s)		-	NA	NA	not required
PHD – g's		-	NA	NA	not required
ASI		0.91	NA	NA	not required

Figure 64. Summary of Test Results and Sequential Photographs, Test No. MWTSP-2

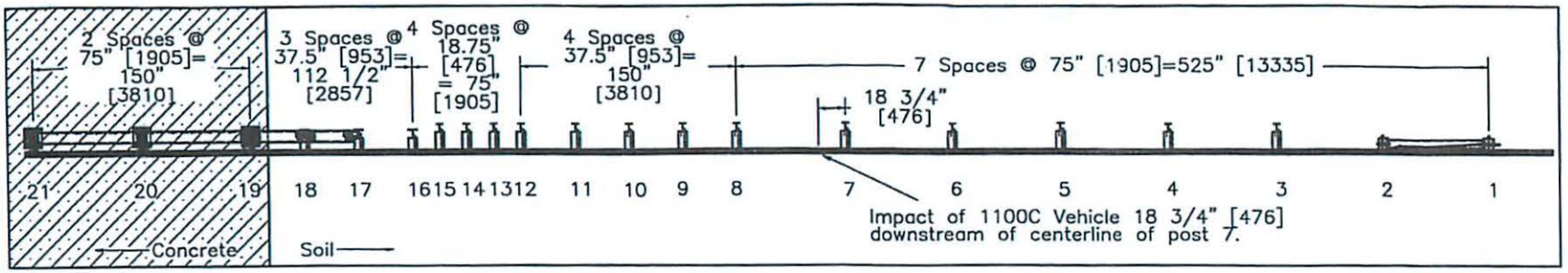

PLAN VIEW

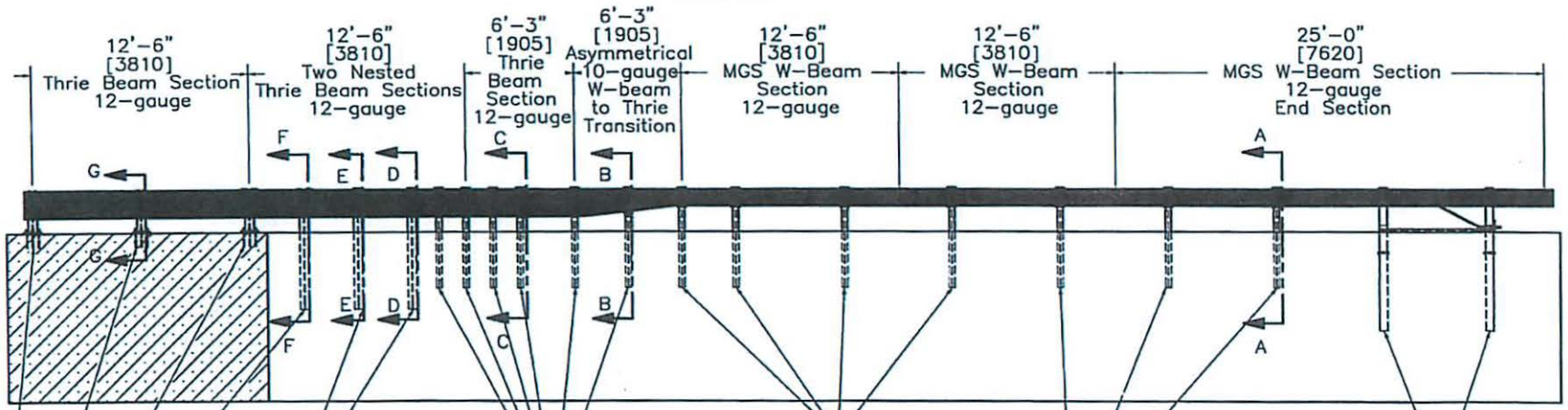

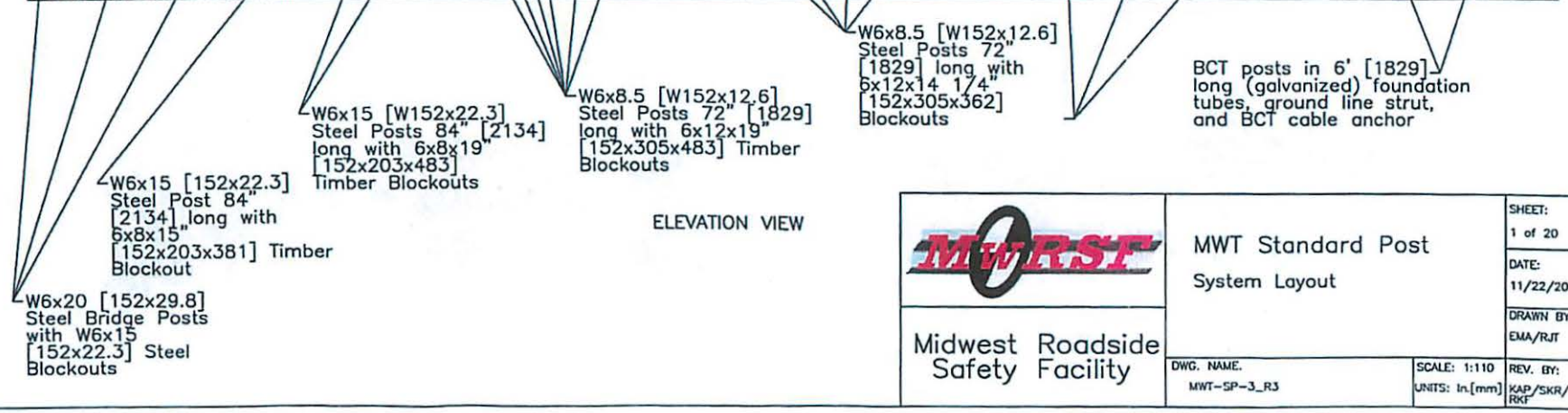

ELEVATION VIEW

MwRSF Midwest Roadside Safety Facility	MWT Standard Post System Layout	SHEET: 1 of 20
		DATE: 11/22/2010
		DRAWN BY: EMA/RJT
	DWG. NAME. MWT-SP-3_R3 / SCALE: 1:110 UNITS: In.[mm]	REV. BY: KAP/SKR/RKF

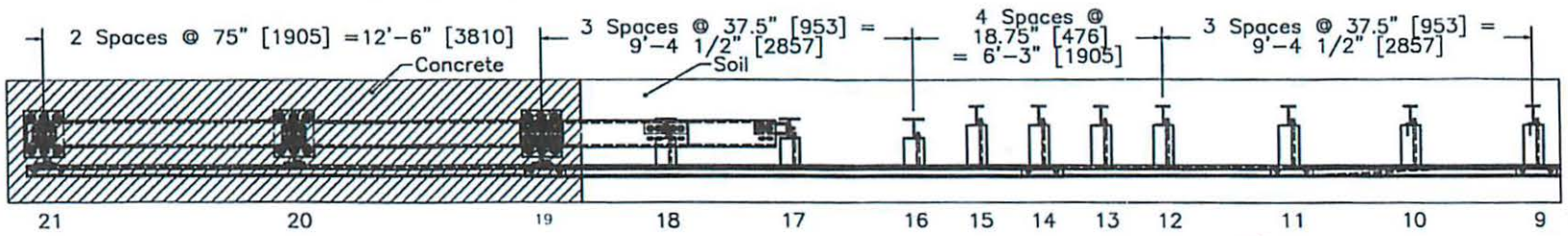

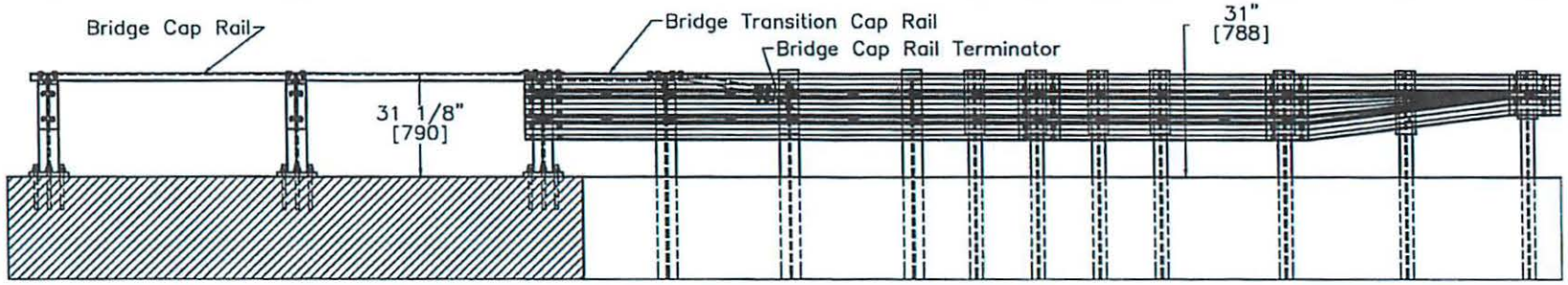

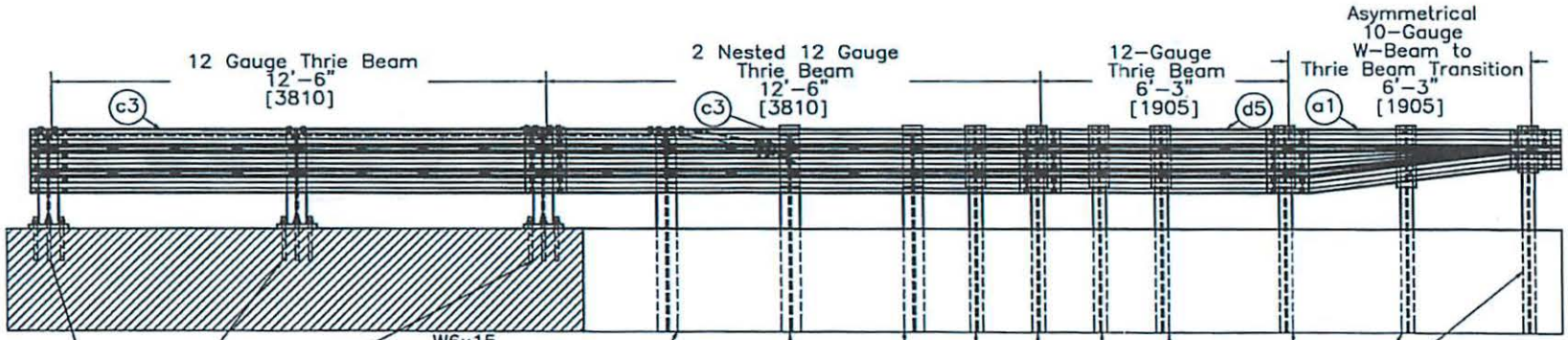

W6x20 [W152x29.8] Steel Bridge Posts with W6x15 [W152x22.3] Steel Blockouts

W6x15 [W152x22.3] Steel Post 84" [2134] long, with 6x8x15" [152x203x381] Timber Blockout

W6x15 [W152x22.3] Steel Posts 84" [2134] long with 6x8x19" [152x203x483] Timber Blockouts

W6x8.5 [W152x12.6] Steel Posts 72" [1829] long with 6x12x19" [152x305x483] Timber Blockouts

W6x8.5 [152x12.6] Steel Post 72" [1829] long with 6x12x14 1/4" [152x305x362] Timber Blockout

Midwest Roadside Safety Facility

MWT Standard Post

Transition Detail

SHEET:	2 of 20
DATE:	11/22/2010
DRAWN BY:	EMA/RJT
DWG. NAME.	MWT-SP-3_R3
SCALE: 1:50	
UNITS: In.[mm]	
REV. BY:	KAP/SKR/RKF

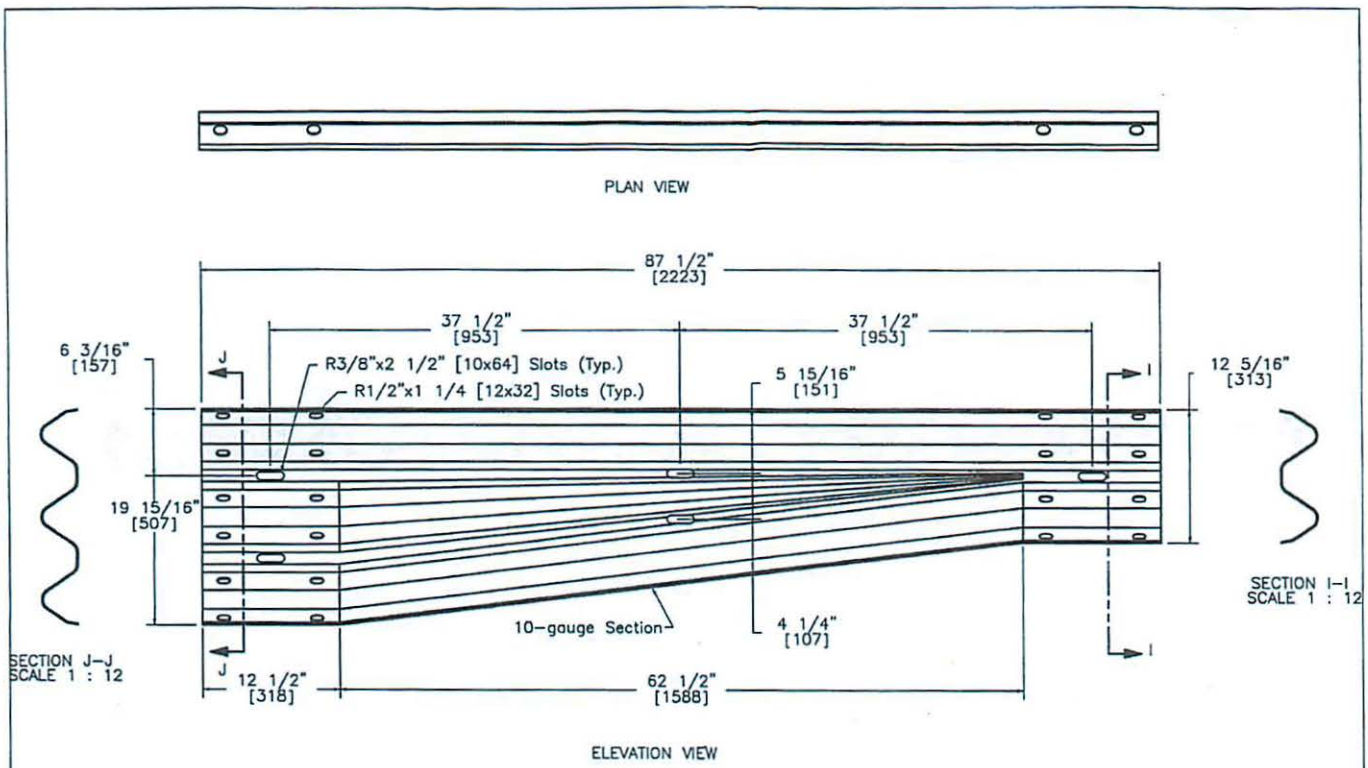

MwRSF Midwest Roadside Safety Facility	MWT Standard Post Asymmetrical W-Beam to Thrie Beam Transition Rail Section Detail	SHEET: 3 of 20 DATE: 11/22/2010 DRAWN BY: EMA/RJT
	DWG. NAME. MWT-SP-3_R3 SCALE: 1:10 UNITS: in.[mm]	REV. BY: KAP/SKR/RKF

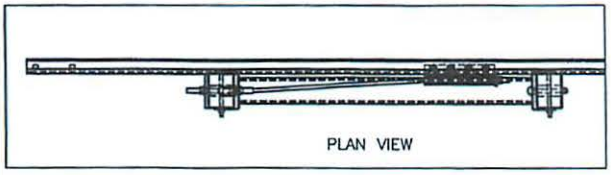

PLAN VIEW

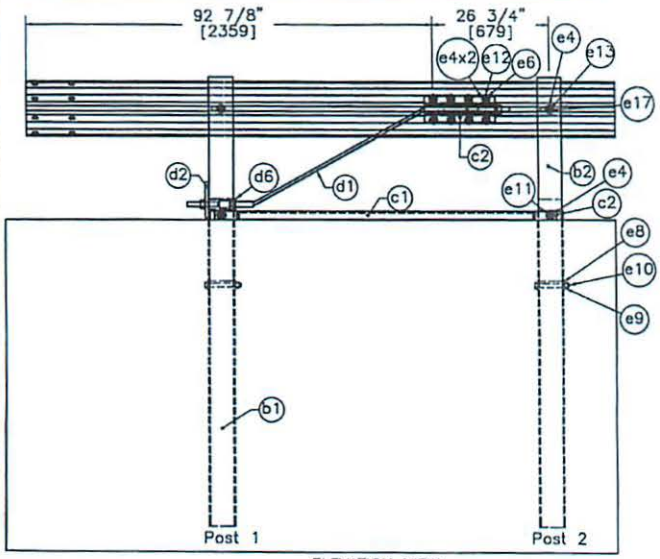

ELEVATION VIEW
END RAIL DETAIL

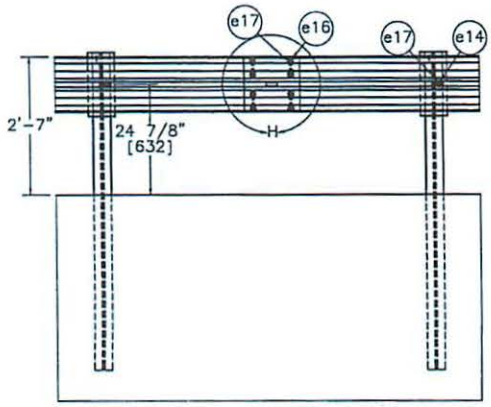

ELEVATION VIEW
SPLICE DETAIL

DETAIL H
SCALE 1 : 15

MwRSF Midwest Roadside Safety Facility	MWT Standard Post Splice Detail End Rail Detail	SHEET: 4 of 20 DATE: 11/22/2010 DRAWN BY: EMA/RJT
	DWG. NAME. MWT-SP-3_R3	SCALE: None UNITS: In.[mm] REV. BY: KAP/SKR/RKJ

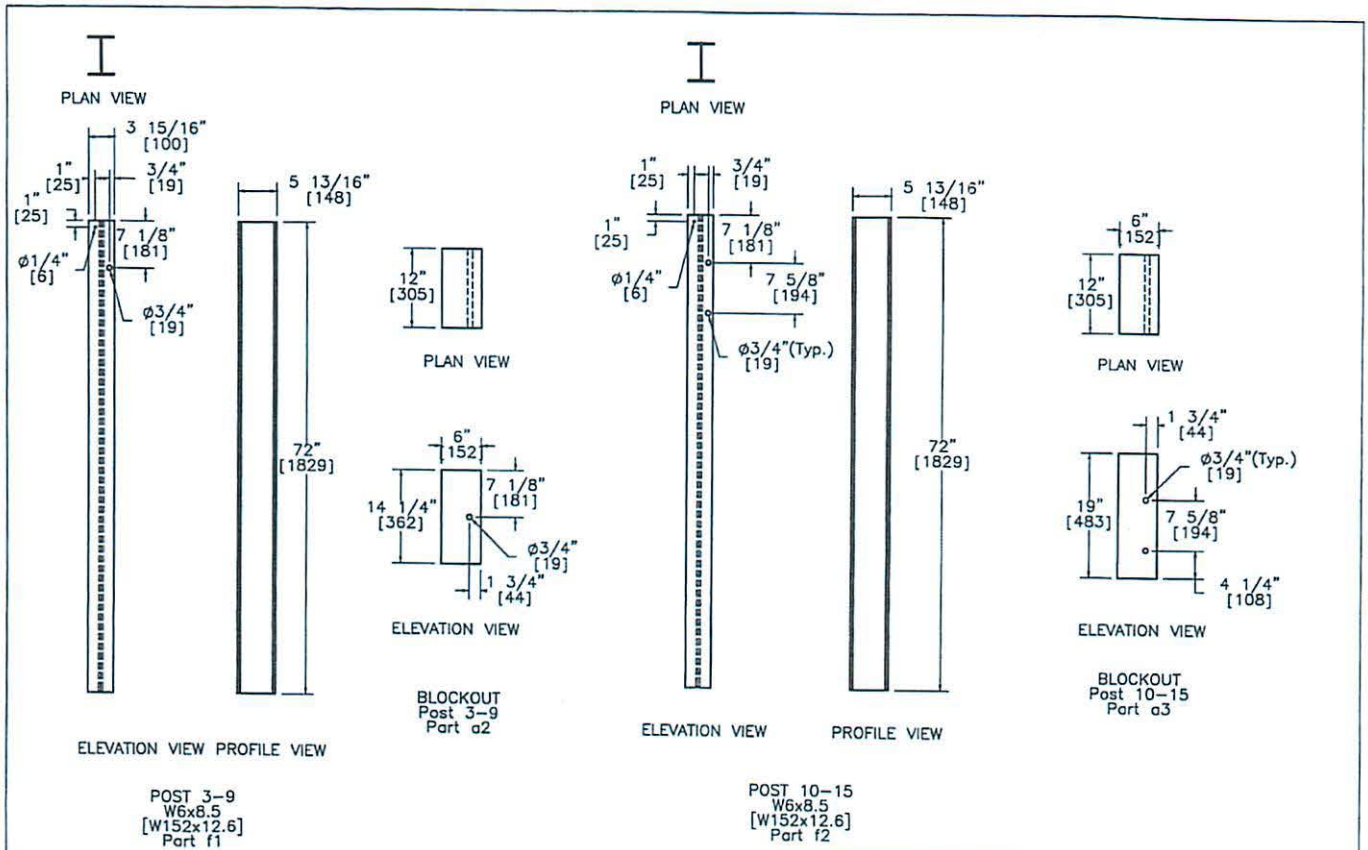

Midwest Roadside Safety Facility

MWT Standard Post

Posts 3-15
Details

SHEET: 5 of 20

DATE: 11/22/2010

DRAWN BY: EMA/RJT

DWG. NAME: MWT-SP-3_R3

SCALE: 1:20

UNITS: in.[mm]

REV. BY: KAP/SKR/RKF

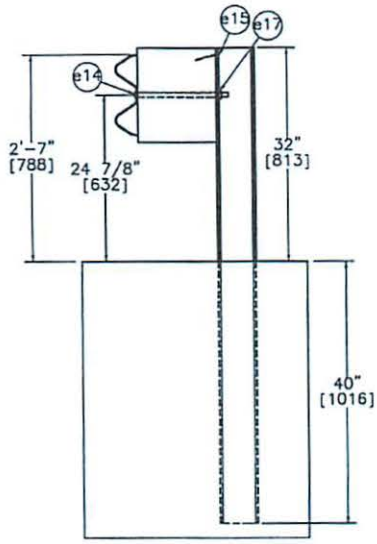

SECTION A-A
Post 3-9

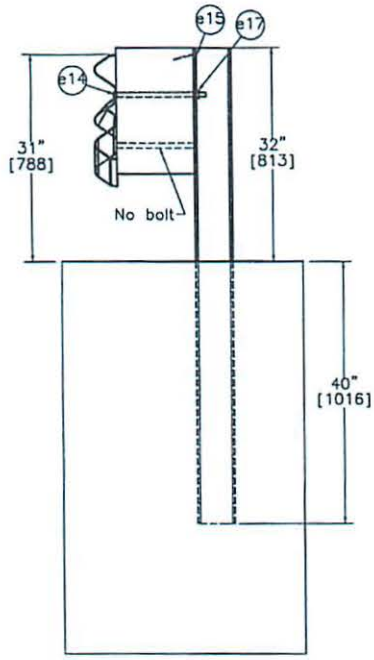

SECTION B-B
Post 10

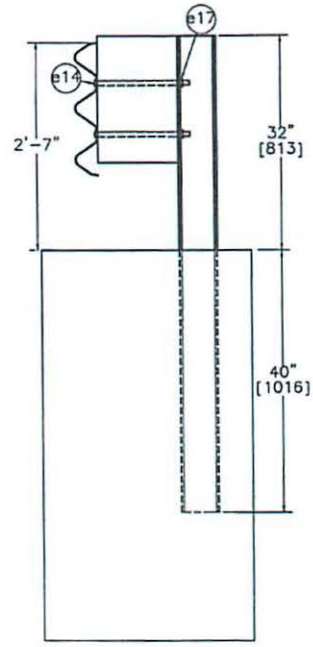

SECTION C-C
Post 11-15

MWRSF Midwest Roadside Safety Facility	MWT Standard Post Posts 3-15 Details with Rail	SHEET: 6 of 20 DATE: 11/22/2010 DRAWN BY: EMA/RJT
	DWG. NAME: MWT-SP-3_R3 SCALE: 1:20 UNITS: in.[mm]	REV. BY: KAP/SKR/RKF

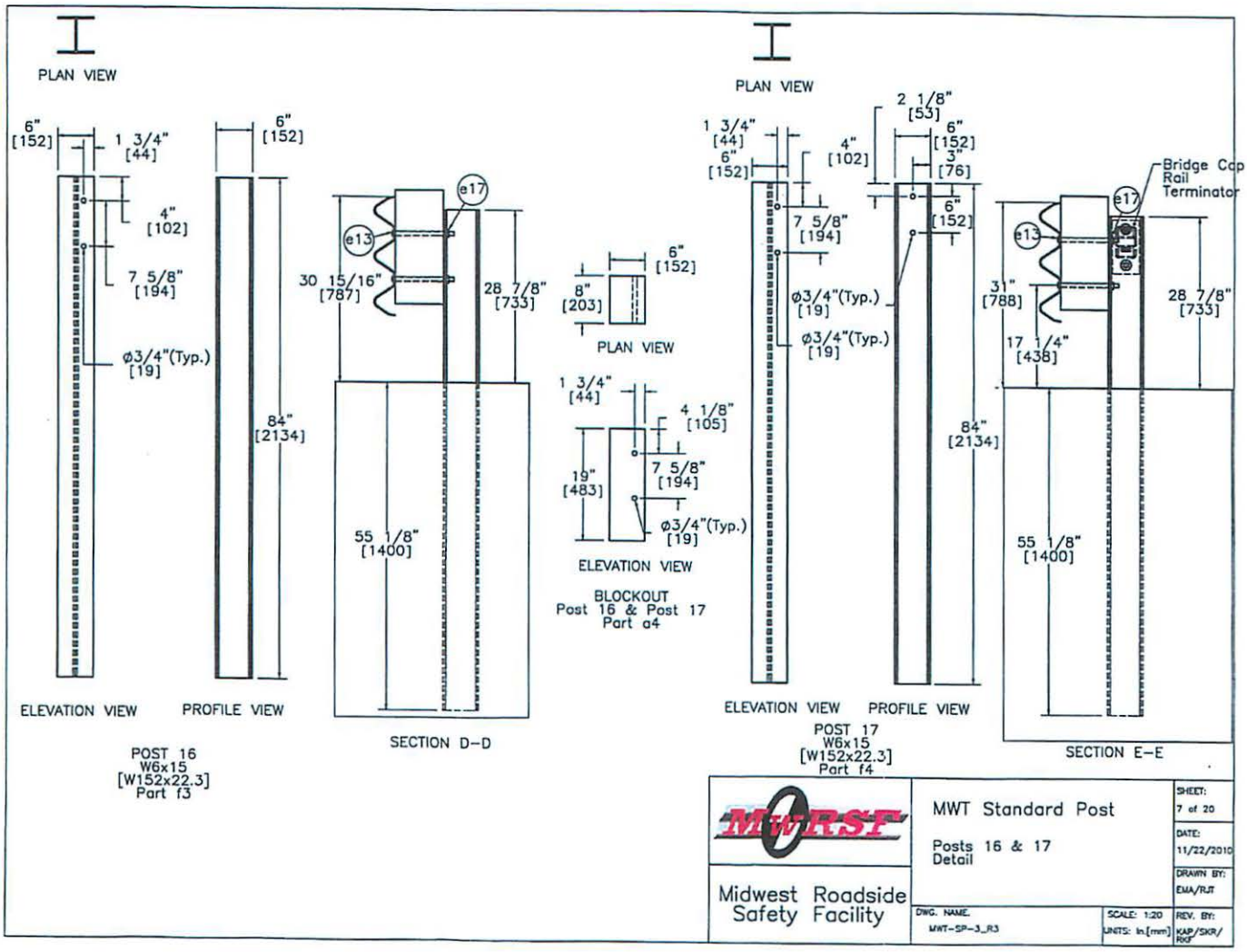
PLAN VIEW
6" [152]
1 3/4" [44]
4" [102]
7 5/8" [194]
ø3/4"(Typ.) [19]
ELEVATION VIEW
6" [152]
84" [2134]
PROFILE VIEW
POST 16
W6x15
[W152x22.3]
Part f3
e17
e13
30 15/16" [787]
28 7/8" [733]
55 1/8" [1400]
SECTION D-D
6" [152]
8" [203]
PLAN VIEW
1 3/4" [44]
4 1/8" [105]
19" [483]
7 5/8" [194]
ø3/4"(Typ.) [19]
ELEVATION VIEW
BLOCKOUT
Post 16 & Post 17
Part a4
PLAN VIEW
1 3/4" [44]
6" [152]
7 5/8" [194]
ø3/4"(Typ.) [19]
ø3/4"(Typ.) [19]
ELEVATION VIEW
2 1/8" [53]
4" [102]
6" [152]
3" [76]
6" [152]
84" [2134]
PROFILE VIEW
POST 17
W6x15
[W152x22.3]
Part f4
Bridge Cap Rail Terminator
e17
e13
31" [788]
28 7/8" [733]
17 1/4" [438]
55 1/8" [1400]
SECTION E-E
MWRSF
Midwest Roadside Safety Facility
MWT Standard Post
Posts 16 & 17 Detail
SHEET: 7 of 20
DATE: 11/22/2010
DRAWN BY: EMA/RJT
DWG. NAME. MWT-SP-3_R3
SCALE: 1:20
UNITS: in.[mm]
REV. BY: KAP/SKR/RKF

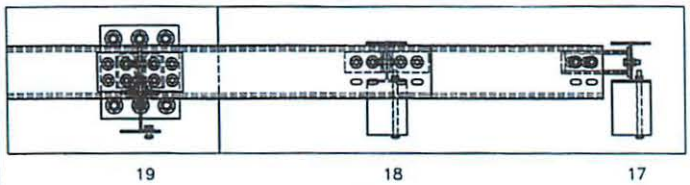

PLAN VIEW

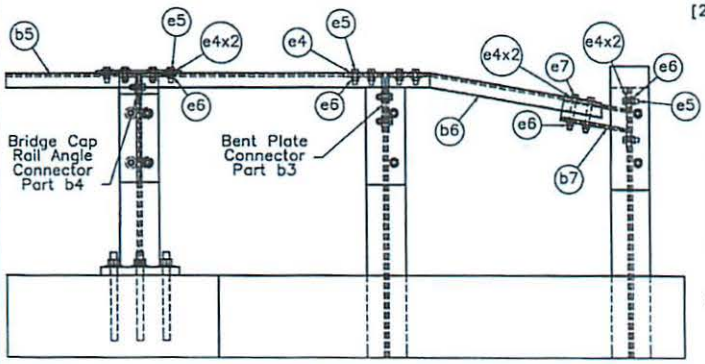

ELEVATION VIEW

CAP RAIL DETAILS

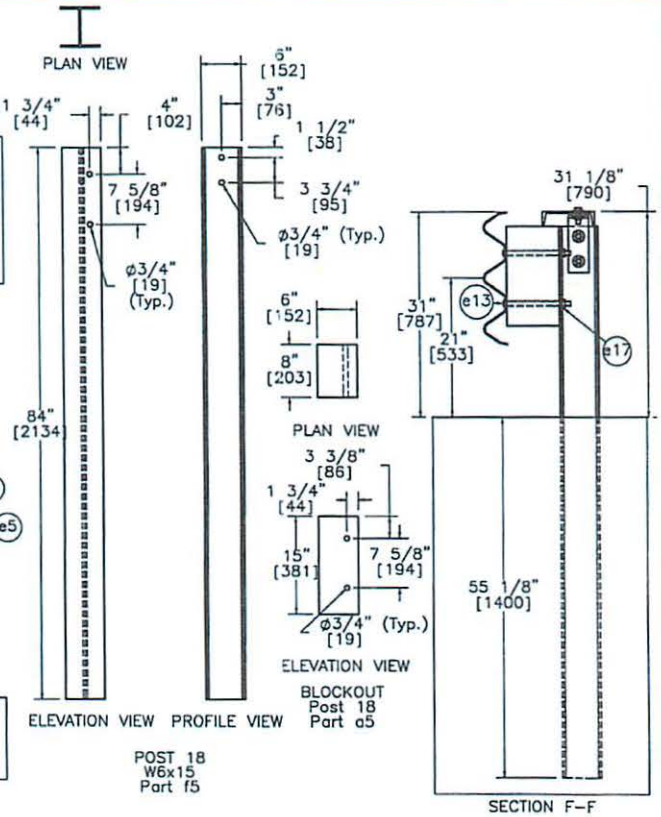

MWRSF Midwest Roadside Safety Facility	MWT Standard Post Cap Rail Hardware Details Post 18 Detail	SHEET: 8 of 20 DATE: 11/22/2010 DRAWN BY: EMA/RJT
	DWG. NAME. MWT-SP-3_R3	SCALE: 1:20 UNITS: in.[mm] REV. BY: KAP/SKR/RKF

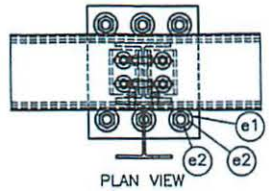

PLAN VIEW

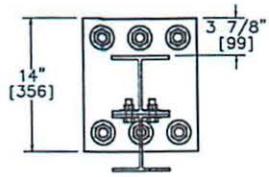

TOP VIEW

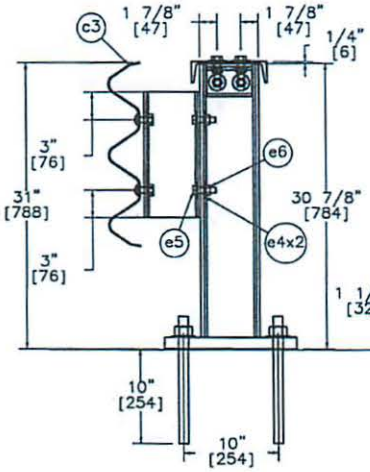

PROFILE VIEW
WITH GUARDRAIL

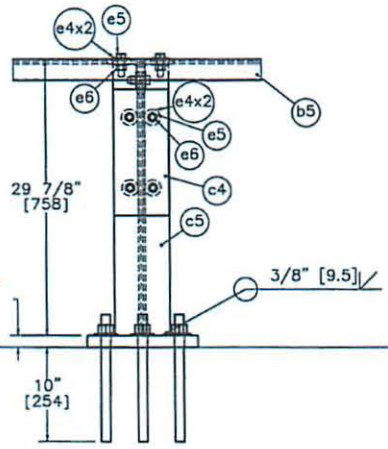

ELEVATION VIEW

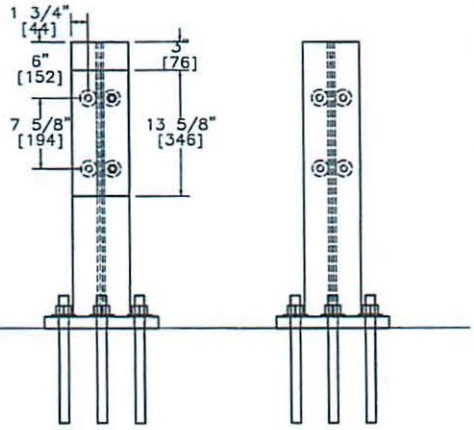

MwRSF Midwest Roadside Safety Facility	MWT Standard Post Bridge Rail Details	SHEET: 9 of 20
		DATE: 11/22/2010
		DRAWN BY: EMA/RJT
	DWG. NAME. MWT-SP-3_R3 / SCALE: 1:14 / UNITS: in.[mm]	REV. BY: KAP/SKR/RKF

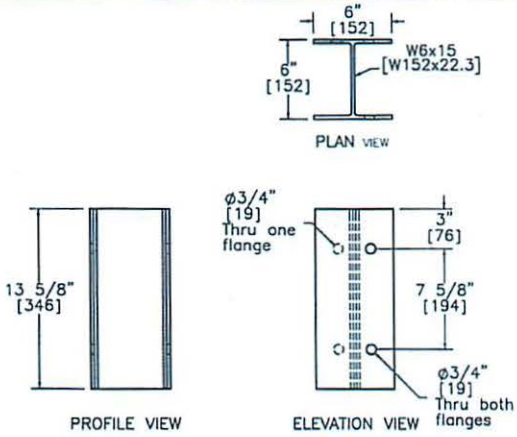

Steel Blockout
Part c4

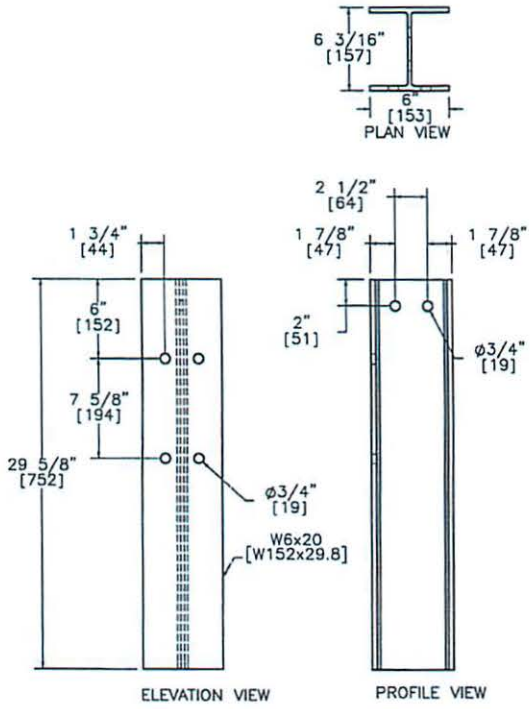

Steel Post
Part c5

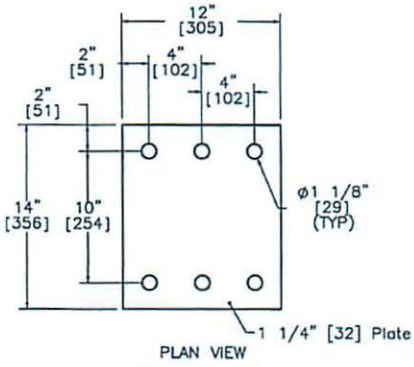

Connector Plate
Part c6

MwRSF Midwest Roadside Safety Facility	MWT Standard Post Bridge Rail Details	SHEET: 10 of 20
		DATE: 11/22/2010
		DRAWN BY: EMA/RJT
	DWG. NAME. MWT-SP-3_R3 / SCALE: 1:10 UNITS: in.[mm]	REV. BY: KAP/SKR/RKF

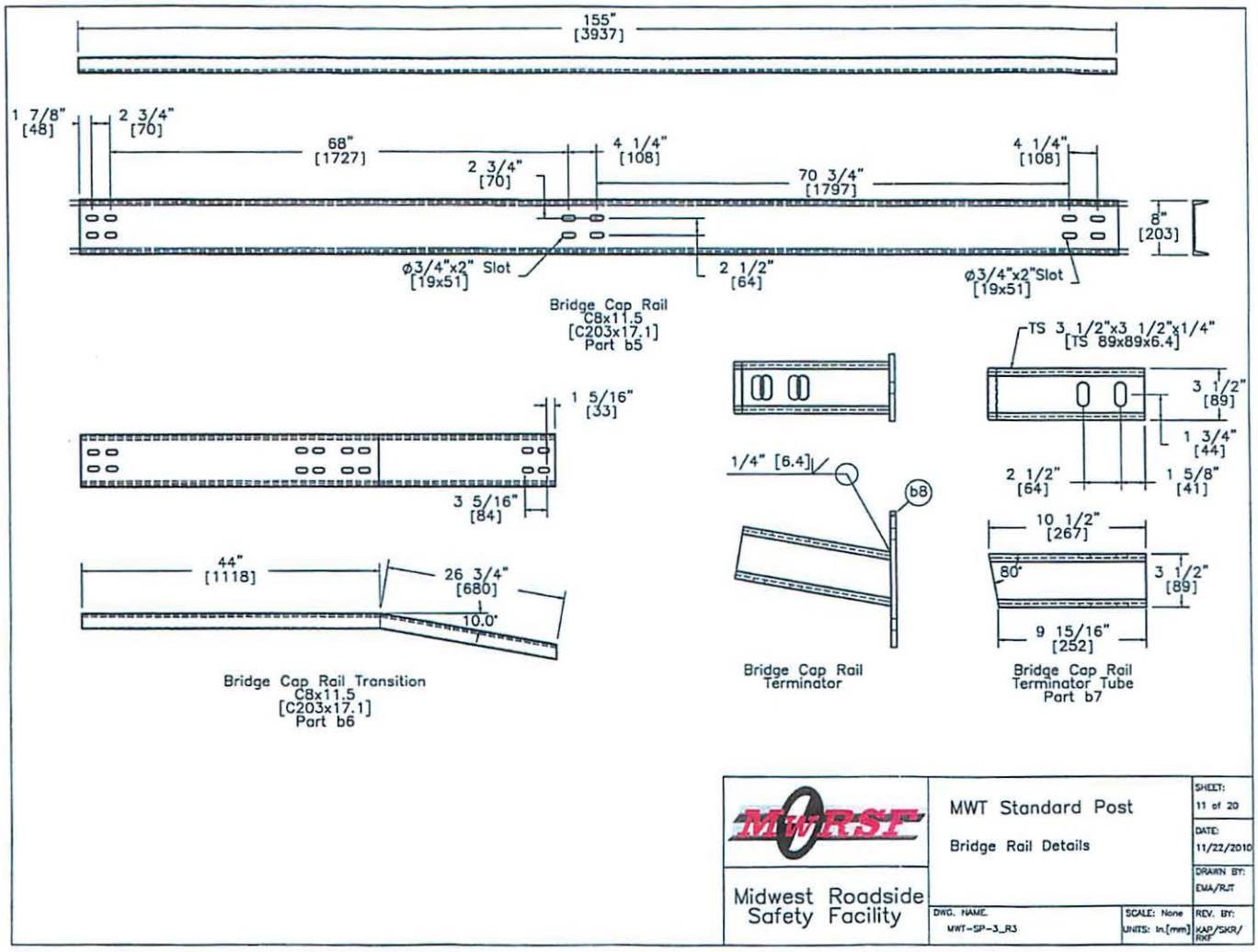
155" [3937]
1 7/8" [48]
2 3/4" [70]
68" [1727]
4 1/4" [108]
2 3/4" [70]
70 3/4" [1797]
4 1/4" [108]
8" [203]
ø3/4"x2" Slot [19x51]
2 1/2" [64]
ø3/4"x2"Slot [19x51]
Bridge Cap Rail C8x11.5 [C203x17.1] Part b5
TS 3 1/2"x3 1/2"x1/4" [TS 89x89x6.4]
3 1/2" [89]
1 3/4" [44]
2 1/2" [64]
1 5/8" [41]
1 5/16" [33]
3 5/16" [84]
1/4" [6.4]
b8
10 1/2" [267]
80°
3 1/2" [89]
9 15/16" [252]
44" [1118]
26 3/4" [680]
10.0°
Bridge Cap Rail Transition C8x11.5 [C203x17.1] Part b6
Bridge Cap Rail Terminator
Bridge Cap Rail Terminator Tube Part b7
MWRSF
Midwest Roadside Safety Facility
MWT Standard Post
Bridge Rail Details
SHEET: 11 of 20
DATE: 11/22/2010
DRAWN BY: EMA/RJT
DWG. NAME. MWT-SP-3_R3
SCALE: None
UNITS: in.[mm]
REV. BY: KAP/SKR/RKF

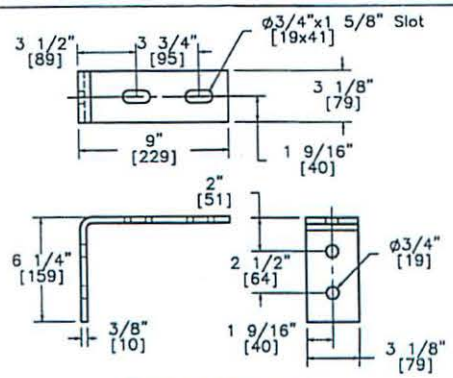

Bent Plate Connector
L 6 1/4"x9"x3/8"
[L 159x229x10]
Part b3

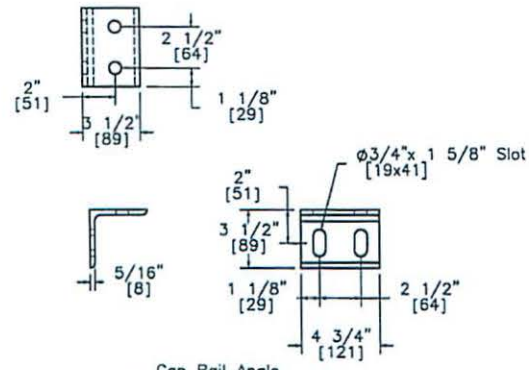

Cap Rail Angle
L 3 1/2"x3 1/2"x 5/16"
[L 89x89x8]
Part b4

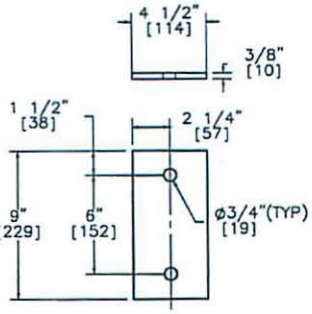

Bridge Cap Rail
Terminator Plate
Part b8

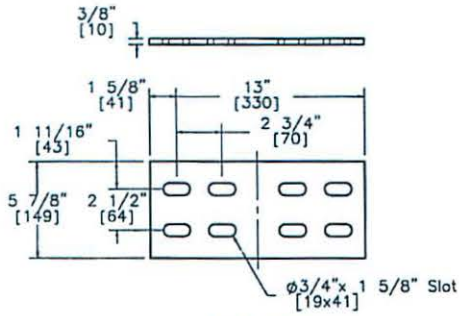

Splice Plate
Part b9

MwRSF	MWT Standard Post Bridge Rail Details	SHEET: 12 of 20
		DATE: 11/22/2010
		DRAWN BY: EMA/RJT
Midwest Roadside Safety Facility	DWG. NAME: MWT-SP-3_R3 / SCALE: 1:8 / UNITS: in [mm]	REV. BY: KAP/SKR/RKF

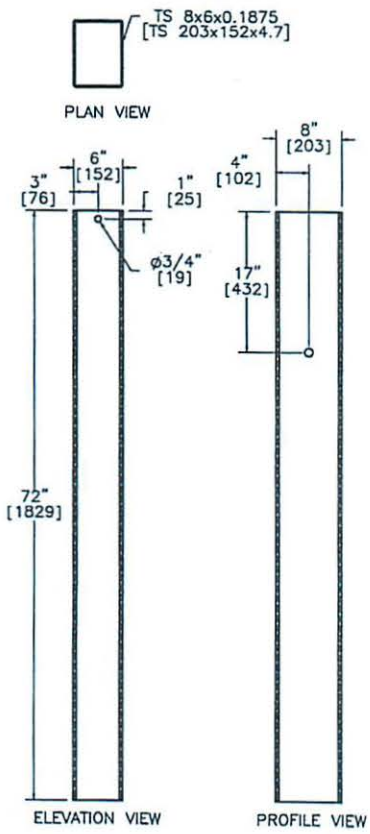

Foundation Tube
Part b1

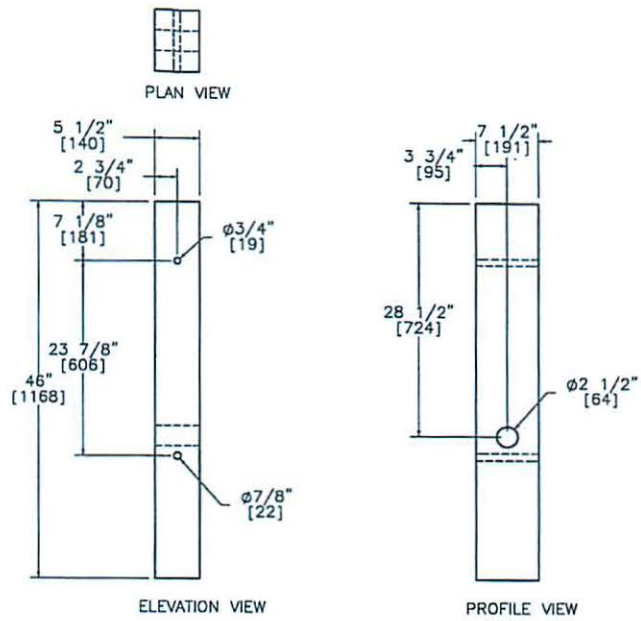

BCT (MGS) Timber Post
Part b2

MWRSF Midwest Roadside Safety Facility	MWT Standard Post BCT Timber Posts & Foundation Tube Detail	SHEET: 13 of 20
		DATE: 11/22/2010
		DRAWN BY: EMA/RJT
	DWG. NAME. MWT-SP-3_R3 / SCALE: 1:16 UNITS: in.[mm]	REV. BY: KAP/SKR/RKF

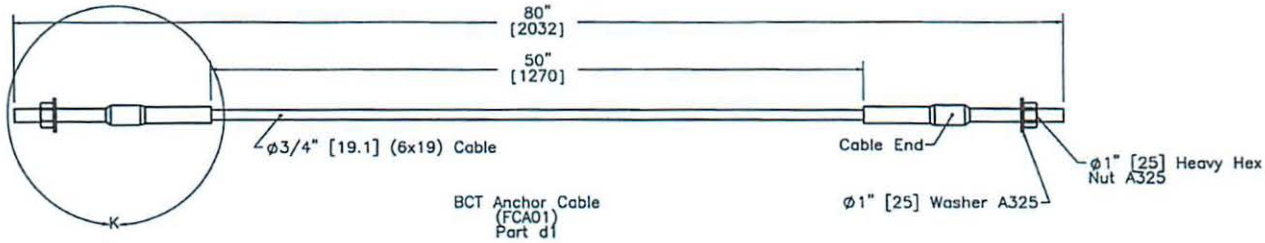

BCT Anchor Cable
(FCA01)
Part d1

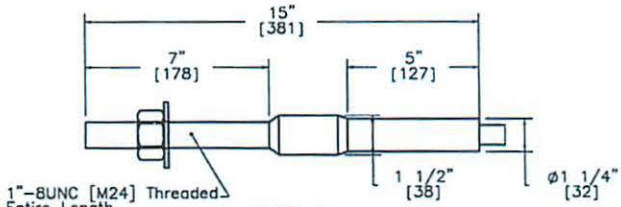

DETAIL K
SCALE 1 : 5

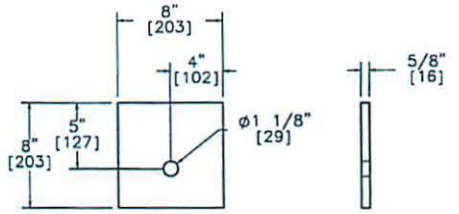

PROFILE VIEW

ELEVATION VIEW

Anchor Cable Bearing Plate
(FPB01)
Part d2

MWRSF Midwest Roadside Safety Facility	MWT Standard Post BCT Anchor Cable Detail	SHEET: 14 of 20 DATE: 11/22/2010 DRAWN BY: EMA/RJT
	DWG. NAME. MWT-SP-3_R3 SCALE: 1:10 UNITS: in.[mm]	REV. BY: KAP/SKR/RKF

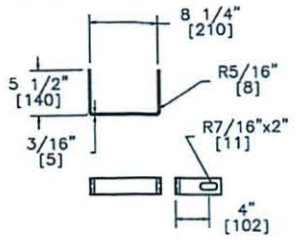

Yoke Detail

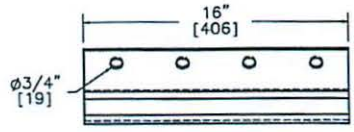

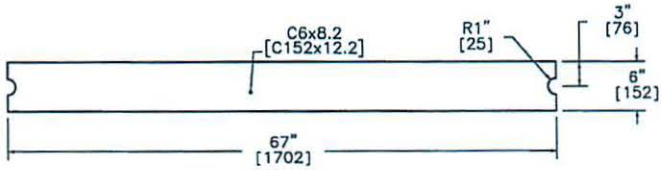

Strut Detail

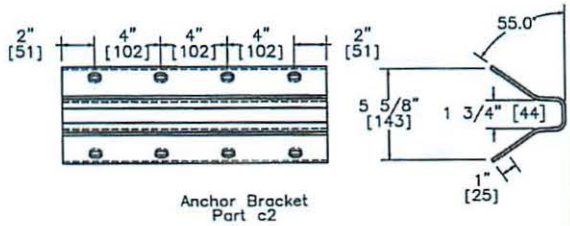

Anchor Bracket
Part c2

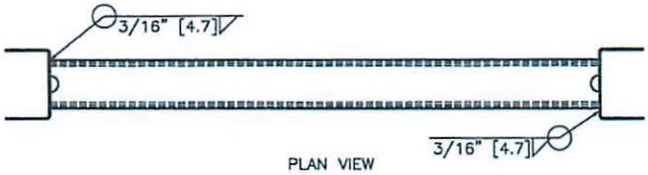

PLAN VIEW

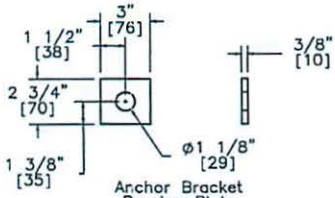

Anchor Bracket
Bearing Plate

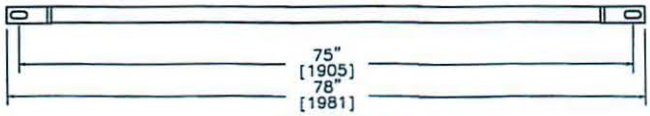

ELEVATION VIEW

Ground Strut
Part c1

MwRSF Midwest Roadside Safety Facility	MWT Standard Post Ground Strut & Anchor Bracket Details	SHEET: 15 of 20
		DATE: 11/22/2010
		DRAWN BY: EMA/RJT
	DWG. NAME. MWT-SP-3_R3 / SCALE: None / UNITS: in.[mm]	REV. BY: KAP/SKR/RKF

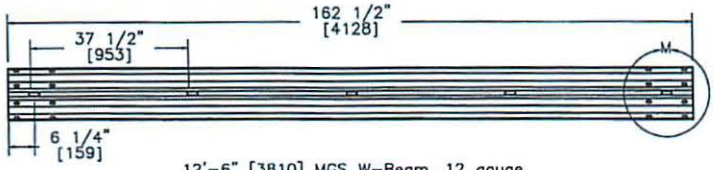

12'-6" [3810] MGS W-Beam, 12 gauge
Part d4

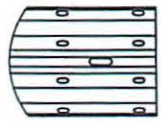

DETAIL M
SCALE 1 : 15

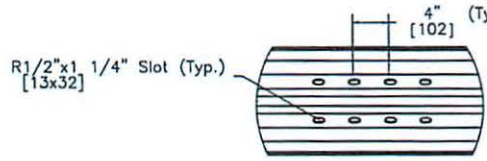

DETAIL N
SCALE 1 : 15

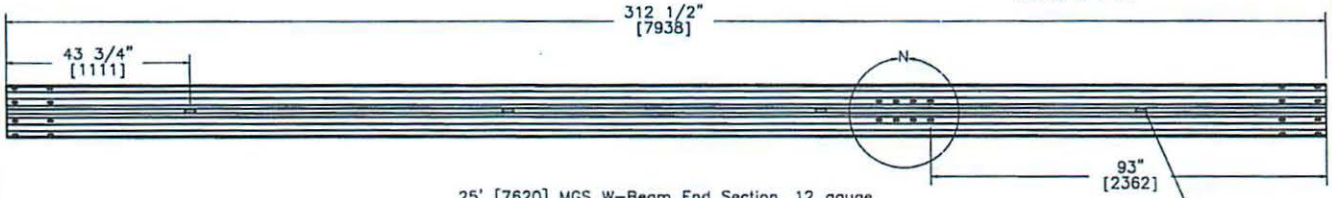

25' [7620] MGS W-Beam End Section, 12 gauge
Part d3

MwRSF Midwest Roadside Safety Facility	MWT Standard Post Rail Section Details		SHEET: 16 of 20
			DATE: 11/22/2010
			DRAWN BY: EMA/RJT
	DWG. NAME. MWT-SP-3_R3	SCALE: 1:31 UNITS: in.[mm]	REV. BY: KAP/SKR/RKF

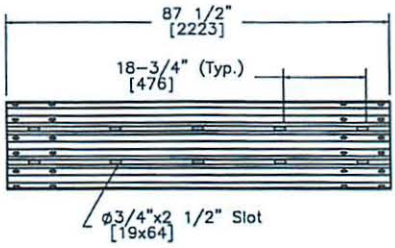

6'-3" [1905] Thrie Beam Section, 12 gauge,
1/4 Post Spacing
Part d5

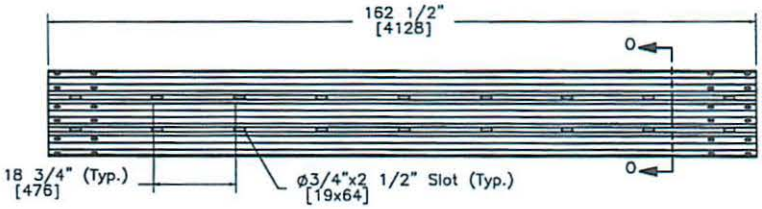

12'-6" [3810] Thrie Beam Section, 12 gauge,
1/4 Post Spacing
Part c3

SECTION O-O

MwRSF Midwest Roadside Safety Facility	MWT Standard Post Rail Section Details	SHEET: 17 of 20
		DATE: 11/22/2010
		DRAWN BY: EMA/RJT
	DWG. NAME. MWT-SP-3_R3 / SCALE: 1:30 UNITS: in.[mm]	REV. BY: KAP/SKR/RKF

Midwest Guardrail System with Standard Post Spacing				
Item No.	QTY.	Description	Material Spec	Hardware Guide
a1	1	6'-3" [1905] W-Beam to Thrie-Beam Transition Section	10 gauge AASHTO M180	-
a2	7	6x12x14 1/4" [152x305x362] Blockout	SYP Grade No.1 or better	-
a3	6	6x12x19" [152x305x483] Blockout - Post 10-15	SYP Grade No.1 or better	-
a4	2	6x8x19" [152x305x483] Blockout - Post 16-17	SYP Grade No.1 or better	-
a5	1	6x8x15" [152x305x381] Blockout - Post 18	SYP Grade No.1 or better	-
b1	2	72" [1829] Foundation Tube	A500 Grade B	PTE05
b2	2	BCT Timber Post -MGS Height	SYP Grade No. 1 or better	PDF01
b3	2	Bridge Cap Rail Bent Plate Connector 6 1/4x9x3/8" [159x229x9.5]	A36 Steel	-
b4	6	Bridge Cap Rail Angle 3 1/2x3 1/2x5/16" [89x89x7.9]	A36 Steel	-
b5	1	Bridge Cap Rail C8x11.5 [C203x17.1]	A36 Steel	-
b6	1	Bridge Cap Rail C8x11.5 [C203x17.1]	A36 Steel	-
b7	1	Bridge Cap Rail Terminator Tube 3 1/2x3 1/2x1/4" [89x89x6.4]	A36 Steel	-
b8	1	Terminator Plate 9x4 1/2x3/8" [229x114x9.5]	A36 Steel	-
b9	1	Bridge Cap Rail Splice Plate 5 7/8x13x3/8" [149x330x9.5]	A36 Steel	-
c1	1	Strut and Yoke Assembly	A36 Steel	PFP01
c2	1	Anchor Bracket	A36 Steel	FPA01
c3	3	12'-6" [3810] Thrie Beam Section - 1/2 Post Spacing	12 gauge AASHTO M180	-
c4	3	W6x15 [W152x22.3] Steel Bridge Blockout	A36 Steel	-
c5	3	W6x20 [W152x29.8] Steel Bridge Post	A36 Steel	-
c6	3	12x14x1 1/4" [305x356x32] Bridge Cap Connector Plate	A36 Steel	-
d1	1	BCT Anchor Cable 6' [1829] Long	6x19 Cable	FCA01
d2	1	8x8x5/8" [203x203x15.9] Anchor Bearing Plate	A36 Steel	FPB01
d3	1	25' [7620] W-Beam MGS End Section	12 gauge AASHTO M180	-
d4	2	12'-6" [3810] W-Beam MGS Section	12 gauge AASHTO M180	-
d5	1	6'-3" [1905] Thrie Beam Section - 1/2 Post Spacing	12 gauge AASHTO M180	-
d6	1	2 3/8" [60] O.D.x 6" [152] long BCT Hole insert	ASTM A53 Grade B Schedule 40	FMM02

Midwest Roadside Safety Facility

MWT Standard Post

Bill of Materials

SHEET: 18 of 20

DATE: 11/22/2010

DRAWN BY: EMA/RJT

DWG. NAME: MWT-SP-3_R3

SCALE: None

UNITS: in.[mm]

REV. BY: KAP/SKR/RKJ

Midwest Guardrail System with Standard Post Spacing				
Item No.	QTY.	Description	Material Spec	Hardware Guide
e1	20	1"Dia. [25] Flat Washer	Grade 5	FWC24a
e2	20	1"Dia. [25] Heavy Hex Nut	Grade 5	A325 or A449 Substitute
e3	18	1"Dia. [25] Threaded Rod	Grade A307	–
e4	116	5/8"Dia. [15.9] Flat Washer	Grade 5	–
e5	42	5/8"Dia. x 2" [M16x51] long Hex Head Bolt	Grade 5	FBX16a
e6	54	5/8"Dia. [15.9] Hex Nut	Grade 5	A325 or A449 Substitute
e7	2	5/8"Dia. x 5" [M16x127] long Hex Head Bolt	Grade 5	FBX16a
e8	4	7/8"Dia. [22.2] Flat Washer	Grade 5	FWC22a
e9	2	7/8"Dia. [22.2] Hex Nut	Grade 5	FBX22a
e10	2	7/8"Dia. x 7 1/2" [M22x191] long Hex Head Bolt	Grade 5	FBX22a
e11	2	5/8"Dia. x 10" [M16x254] long Hex Head Bolt	Grade 5	FBX16a
e12	8	5/8"Dia. x 1 1/2" [M16x38.1] long Hex Head Bolt	Grade 5	FBX16a
e13	8	5/8"Dia. x 10" [M16x254] long Guardrail Bolt	Grade A307	FBB03
e14	18	5/8"Dia. x 14" [M16x356] long Guardrail Bolt	Grade A307	FBB06
e15	8	16D Double Head Nail	–	–
e16	66	5/8"Dia. x 1 1/2" [M16x38] Guardrail Bolt	Grade A307	FBB01
e17	92	5/8"Dia. [15.9] Guardrail Nut	Grade 5	–
f1	7	W6x8.5 [W152x12.6] 72" [1829] long – Post Nos. 3–9	A36 Steel	–
f2	6	W6x8.5 [W152x12.6] 72" [1829] long – Post Nos. 10–15	A36 Steel	–
f3	1	W6x15 [W152x22.3] 84" [2134] long – Post No. 16	A36 Steel	–
f4	1	W6x15 [W152x22.3] 84" [2134] long – Post No. 17	A36 Steel	–
f5	1	W6x15 [W152x22.3] 84" [2134] long – Post No. 18	A36 Steel	–

Midwest Roadside Safety Facility

MWT Standard Post

Bill of Materials

SHEET: 19 of 20

DATE: 11/22/2010

DRAWN BY: EMA/RJT

DWG. NAME: MWT-SP-3_R3

SCALE: None

UNITS: in.[mm]

REV. BY: KAP/SKR/RKP

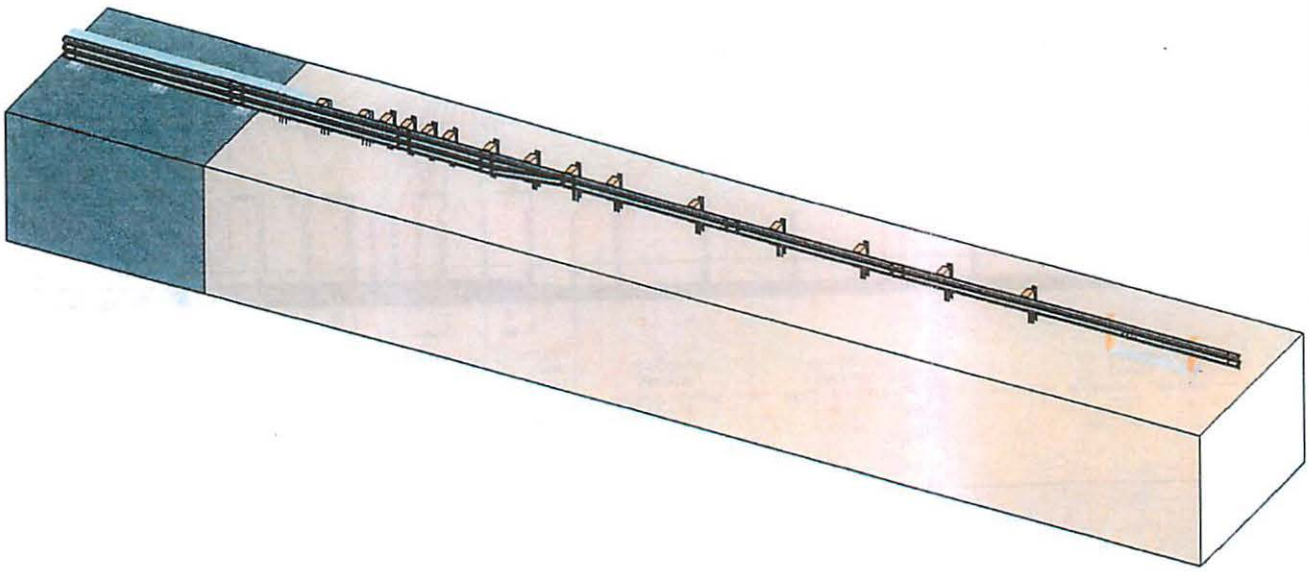

MwRSF Midwest Roadside Safety Facility	MWT Standard Post Isometric System View	SHEET: 20 of 20 DATE: 11/22/2010 DRAWN BY: EMA/RJT
	DWG. NAME: MWT-SP-3_R3	SCALE: 1:105 UNITS: in.[mm] REV. BY: KAP/SKR/RKJ

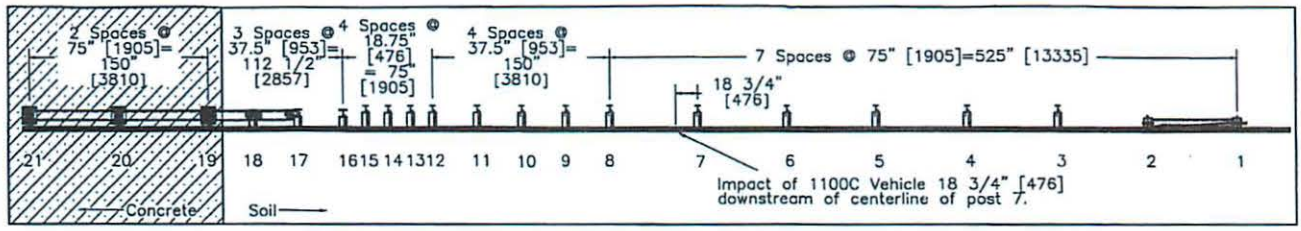

PLAN VIEW

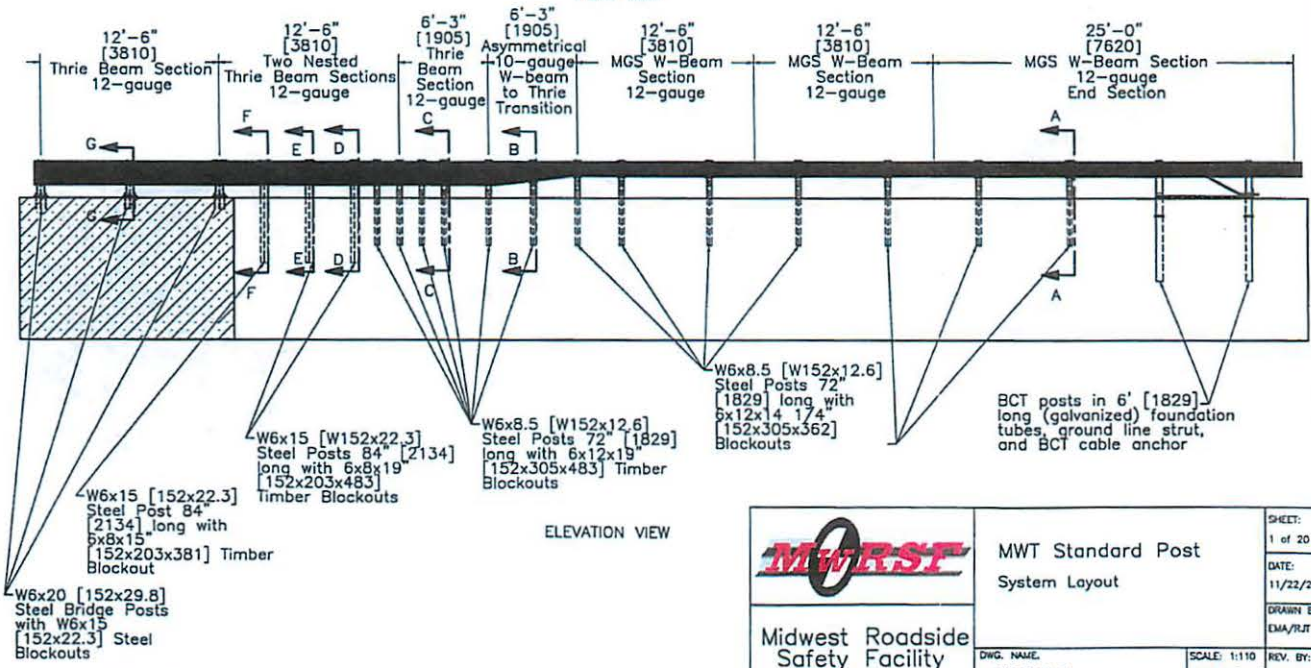

ELEVATION VIEW

MwRSF Midwest Roadside Safety Facility	MWT Standard Post System Layout	SHEET: 1 of 20
		DATE: 11/22/2010
		DRAWN BY: EMA/RJT
	DWG. NAME. MWT-SP-3_R3	SCALE: 1:110 UNITS: in.(mm)
		REV. BY: KAP/SKR/RKP

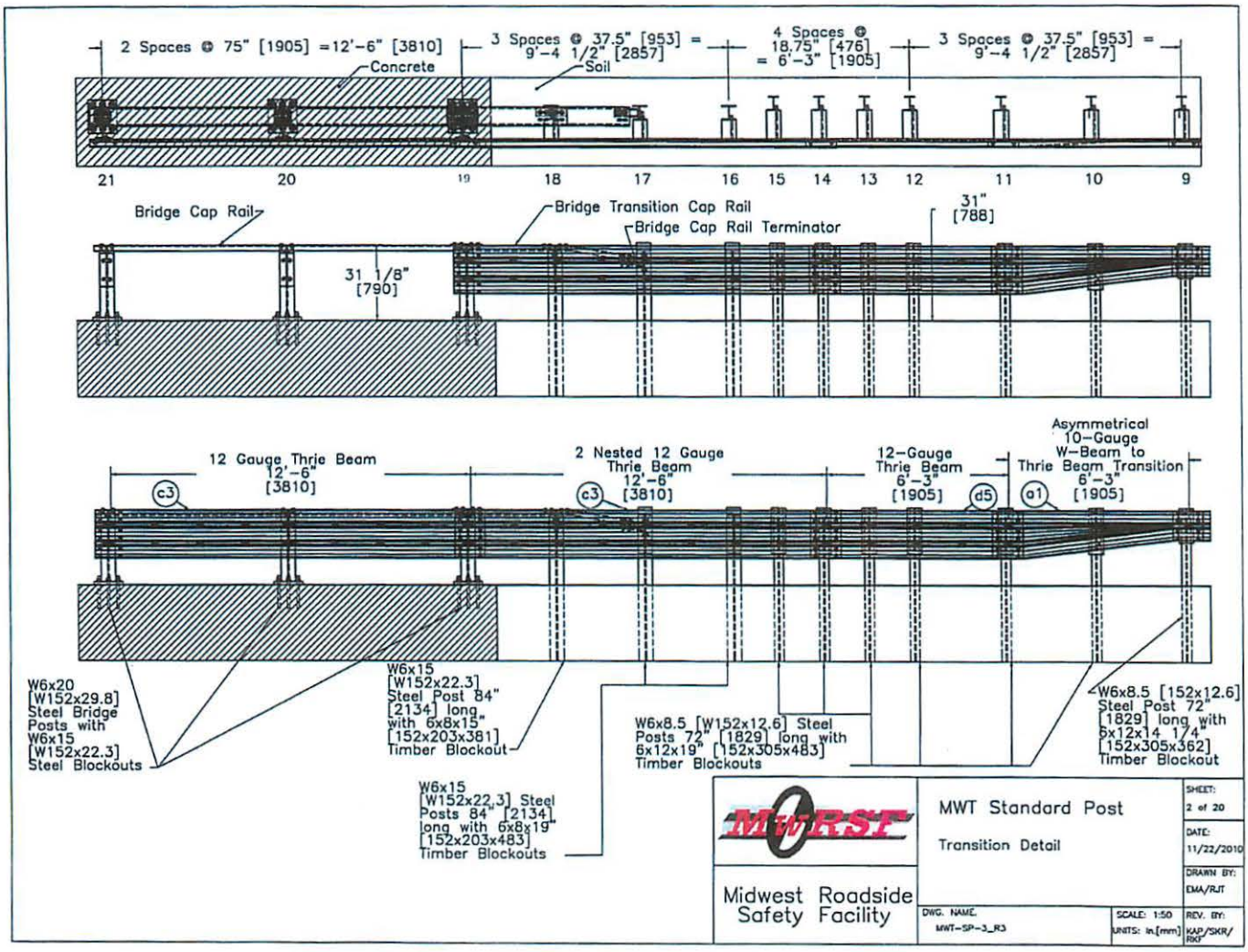
2 Spaces @ 75" [1905] =12'-6" [3810]
3 Spaces @ 37.5" [953] = 9'-4 1/2" [2857]
4 Spaces @ 18.75" [476] = 6'-3" [1905]
3 Spaces @ 37.5" [953] = 9'-4 1/2" [2857]
Concrete
Soil
21
20
19
18
17
16
15
14
13
12
11
10
9
Bridge Cap Rail
Bridge Transition Cap Rail
Bridge Cap Rail Terminator
31" [788]
31 1/8" [790]
12 Gauge Thrie Beam 12'-6" [3810]
2 Nested 12 Gauge Thrie Beam 12'-6" [3810]
12-Gauge Thrie Beam 6'-3" [1905]
Asymmetrical 10-Gauge W-Beam to Thrie Beam Transition 6'-3" [1905]
c3
c3
d5
a1
W6x20 [W152x29.8] Steel Bridge Posts with W6x15 [W152x22.3] Steel Blockouts
W6x15 [W152x22.3] Steel Post 84" [2134] long with 6x8x15" [152x203x381] Timber Blockout
W6x8.5 [W152x12.6] Steel Posts 72" [1829] long with 6x12x19" [152x305x483] Timber Blockouts
W6x15 [W152x22.3] Steel Posts 84" [2134] long with 6x8x19" [152x203x483] Timber Blockouts
W6x8.5 [152x12.6] Steel Post 72" [1829] long with 6x12x14 1/4" [152x305x362] Timber Blockout
MwRSF
Midwest Roadside Safety Facility
MWT Standard Post
Transition Detail
SHEET: 2 of 20
DATE: 11/22/2010
DRAWN BY: EMA/RJT
DWG. NAME. MWT-SP-3_R3
SCALE: 1:50
UNITS: in.[mm]
REV. BY: KAP/SKR/RKF

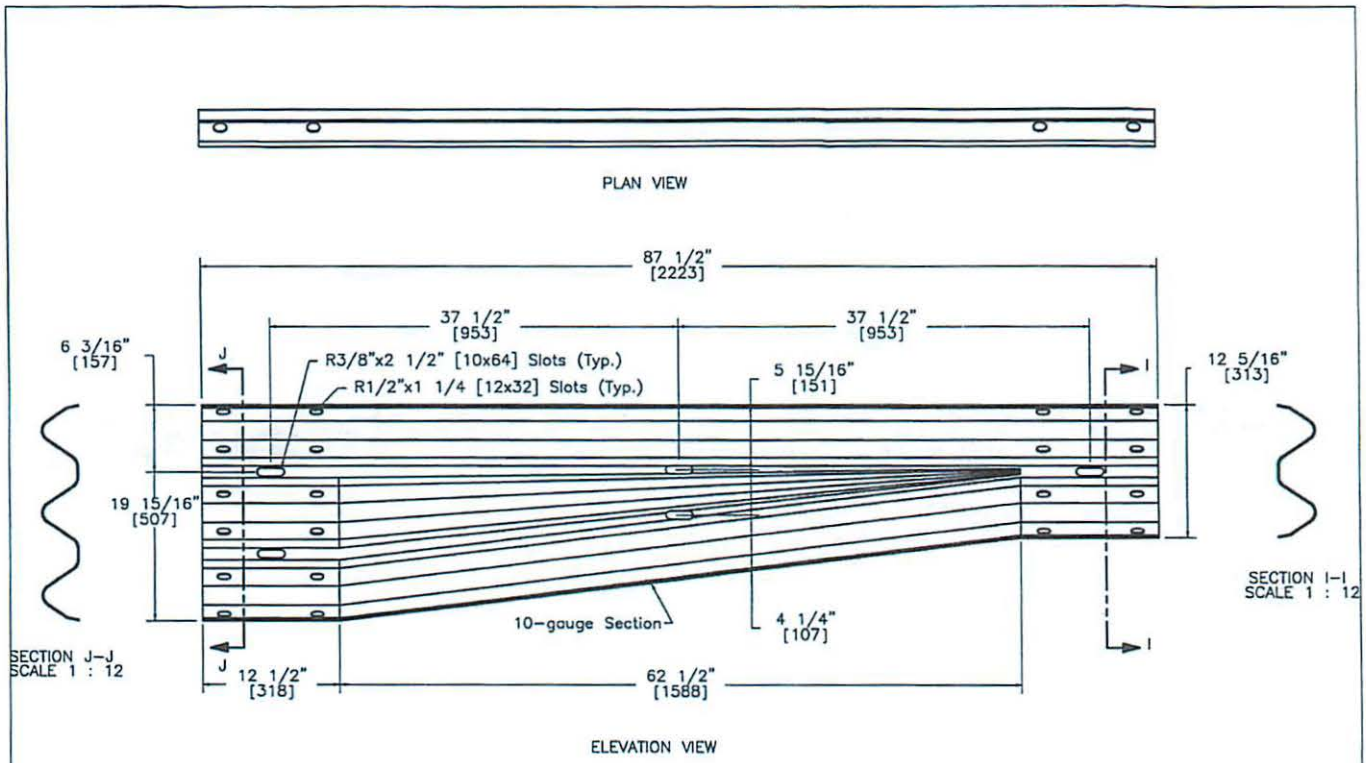

MwRSF Midwest Roadside Safety Facility	MWT Standard Post Asymmetrical W-Beam to Thrie Beam Transition Rail Section Detail	SHEET: 3 of 20 DATE: 11/22/2010 DRAWN BY: EMA/RJT
	DWG. NAME. MWT-SP-3_R3 SCALE: 1:10 UNITS: in.[mm]	REV. BY: KAP/SKR/RKJ

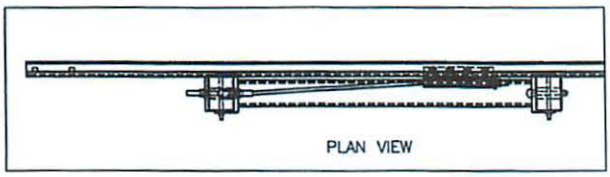

PLAN VIEW

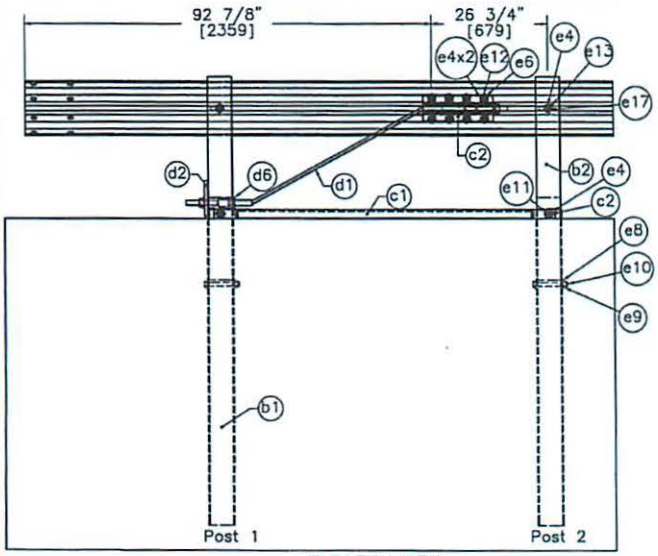

ELEVATION VIEW

END RAIL DETAIL

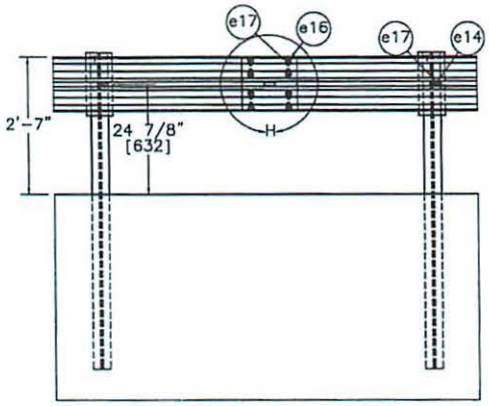

ELEVATION VIEW

SPLICE DETAIL

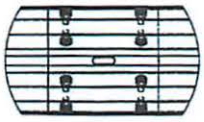

DETAIL H
SCALE 1 : 15

MWRSF Midwest Roadside Safety Facility	MWT Standard Post Splice Detail End Rail Detail	SHEET: 4 of 20
		DATE: 11/22/2010
		DRAWN BY: EMA/RJT
	DWG. NAME. MWT-SP-3_R3 / SCALE: None / UNITS: in.[mm]	REV. BY: KAP/SKR/RKF

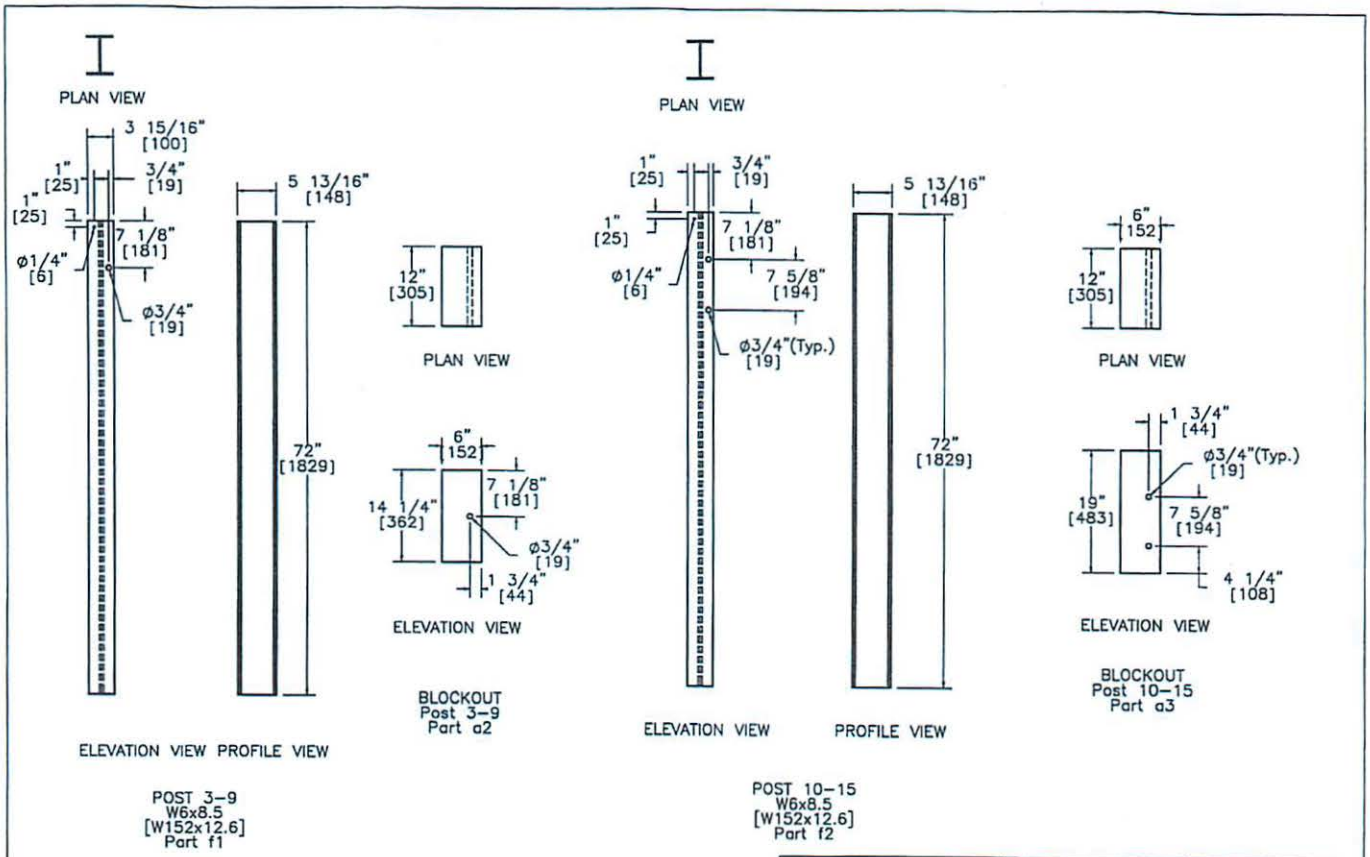

Midwest Roadside Safety Facility

MWT Standard Post

Posts 3-15
Details

SHEET:	5 of 20
DATE:	11/22/2010
DRAWN BY:	EMA/RJT
DWG. NAME:	MWT-SP-3_R3
SCALE: 1:20	UNITS: in[mm]
REV. BY:	KAP/SKR/RKF

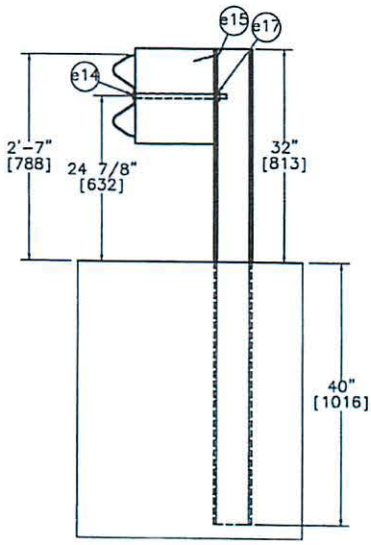

SECTION A-A
Post 3-9

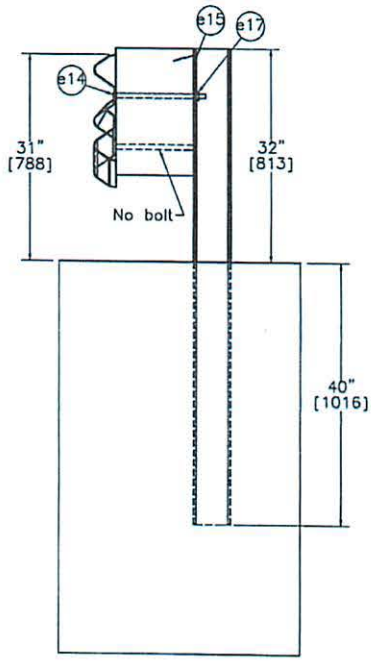

SECTION B-B
Post 10

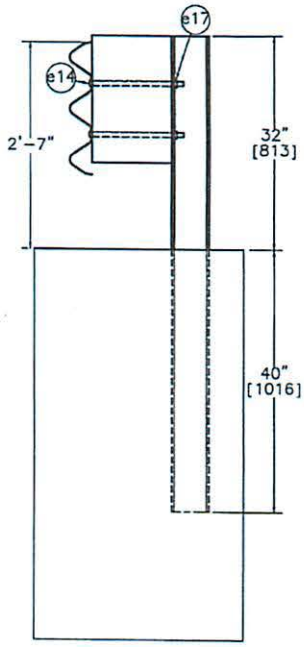

SECTION C-C
Post 11-15

MWRSF	MWT Standard Post Posts 3-15 Details with Rail		SHEET: 6 of 20
			DATE: 11/22/2010
			DRAWN BY: EMA/RJT
Midwest Roadside Safety Facility	DWG. NAME. MWT-SP-3_R3	SCALE: 1:20 UNITS: in.[mm]	REV. BY: KAP/SKR/RKF

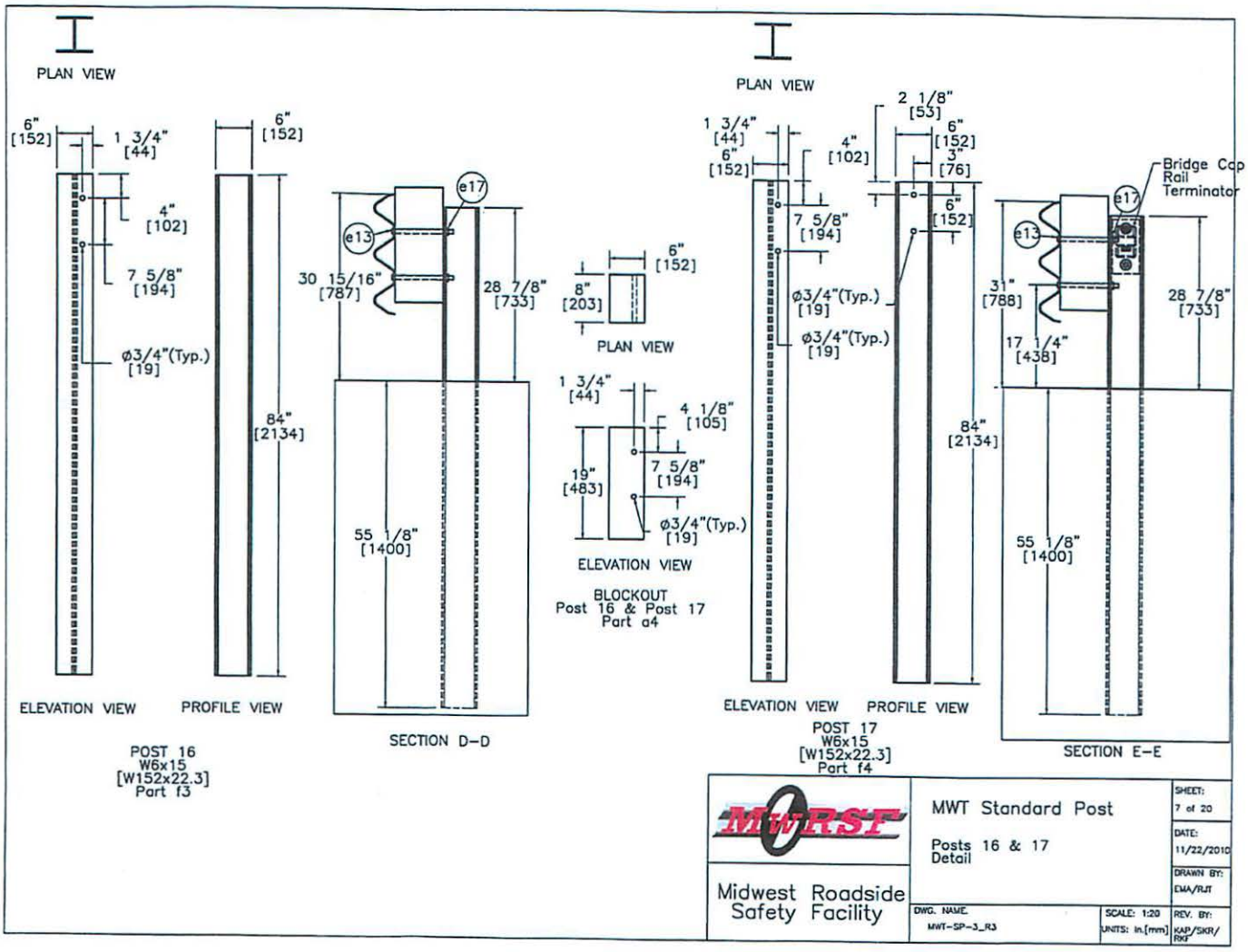
PLAN VIEW
6" [152]
1 3/4" [44]
4" [102]
7 5/8" [194]
ø3/4"(Typ.) [19]
ELEVATION VIEW
6" [152]
84" [2134]
PROFILE VIEW
POST 16
W6x15
[W152x22.3]
Part f3
e17
e13
30 15/16" [787]
28 7/8" [733]
55 1/8" [1400]
SECTION D-D
6" [152]
8" [203]
PLAN VIEW
1 3/4" [44]
4 1/8" [105]
19" [483]
7 5/8" [194]
ø3/4"(Typ.) [19]
ELEVATION VIEW
BLOCKOUT
Post 16 & Post 17
Part a4
PLAN VIEW
1 3/4" [44]
6" [152]
7 5/8" [194]
ø3/4"(Typ.) [19]
ø3/4"(Typ.) [19]
ELEVATION VIEW
2 1/8" [53]
4" [102]
6" [152]
3" [76]
6" [152]
84" [2134]
PROFILE VIEW
POST 17
W6x15
[W152x22.3]
Part f4
Bridge Cap Rail Terminator
e17
e13
31" [788]
17 1/4" [438]
28 7/8" [733]
55 1/8" [1400]
SECTION E-E
MwRSF
Midwest Roadside Safety Facility
MWT Standard Post
Posts 16 & 17 Detail
SHEET: 7 of 20
DATE: 11/22/2010
DRAWN BY: EMA/RJT
DWG. NAME. MWT-SP-3_R3
SCALE: 1:20
UNITS: in.[mm]
REV. BY: KAP/SKR/RKF

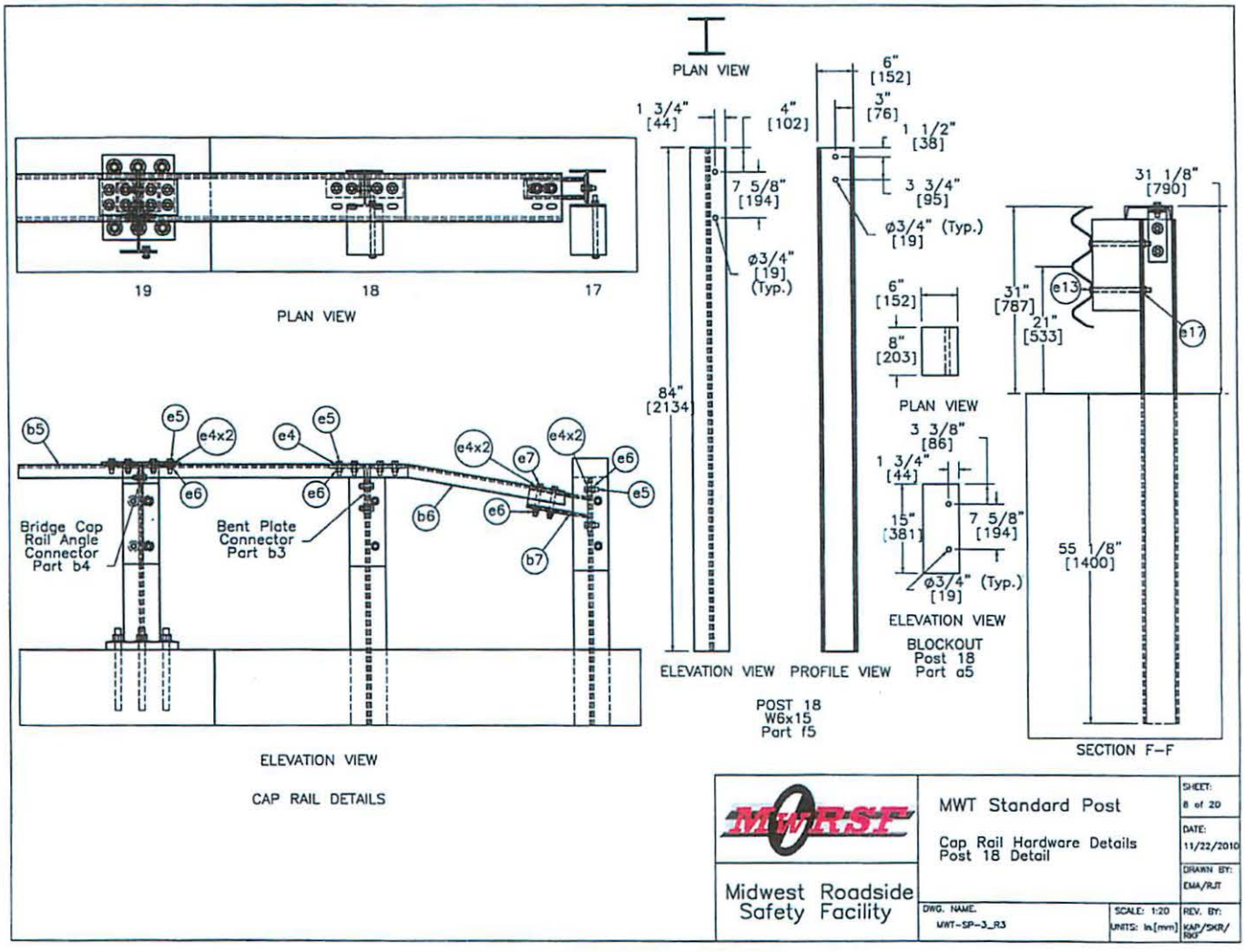

Midwest Roadside Safety Facility

MWT Standard Post

Cap Rail Hardware Details
Post 18 Detail

SHEET: 8 of 20
DATE: 11/22/2010
DRAWN BY: EMA/RJT
DWG. NAME: MWT-SP-3_R3
SCALE: 1:20
UNITS: in.[mm]
REV. BY: KAP/SKR/RKJ

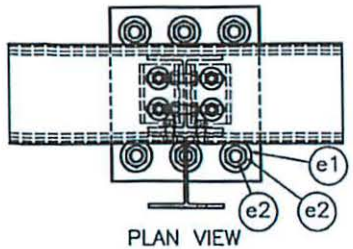

PLAN VIEW

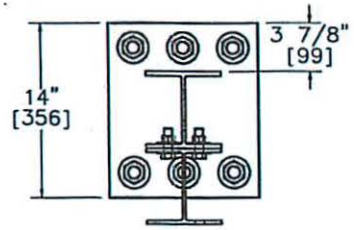

TOP VIEW

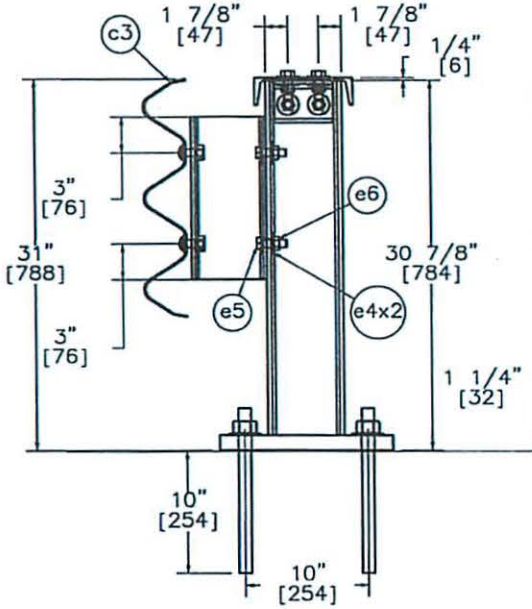

PROFILE VIEW
WITH GUARDRAIL

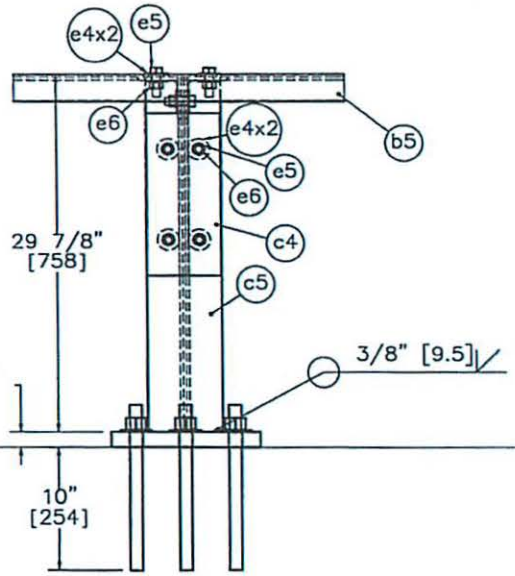

ELEVATION VIEW

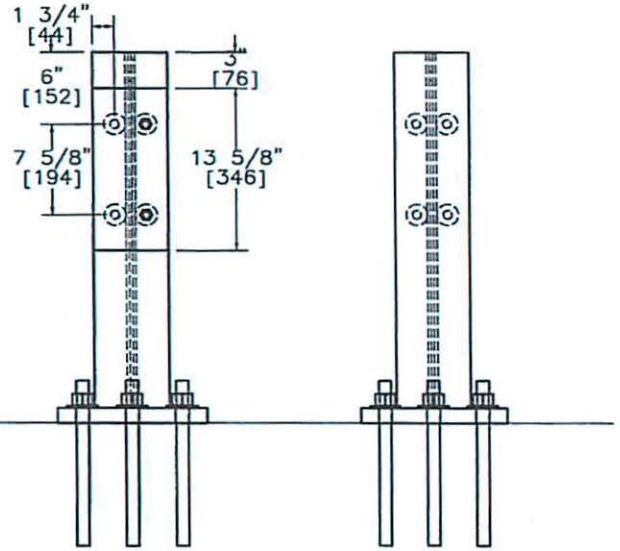

MWRSF Midwest Roadside Safety Facility	MWT Standard Post Bridge Rail Details	SHEET: 9 of 20 DATE: 11/22/2010 DRAWN BY: EMA/RJT
	DWG. NAME. MWT-SP-3_R3 SCALE: 1:14 UNITS: In.[mm]	REV. BY: KAP/SKR/RKF

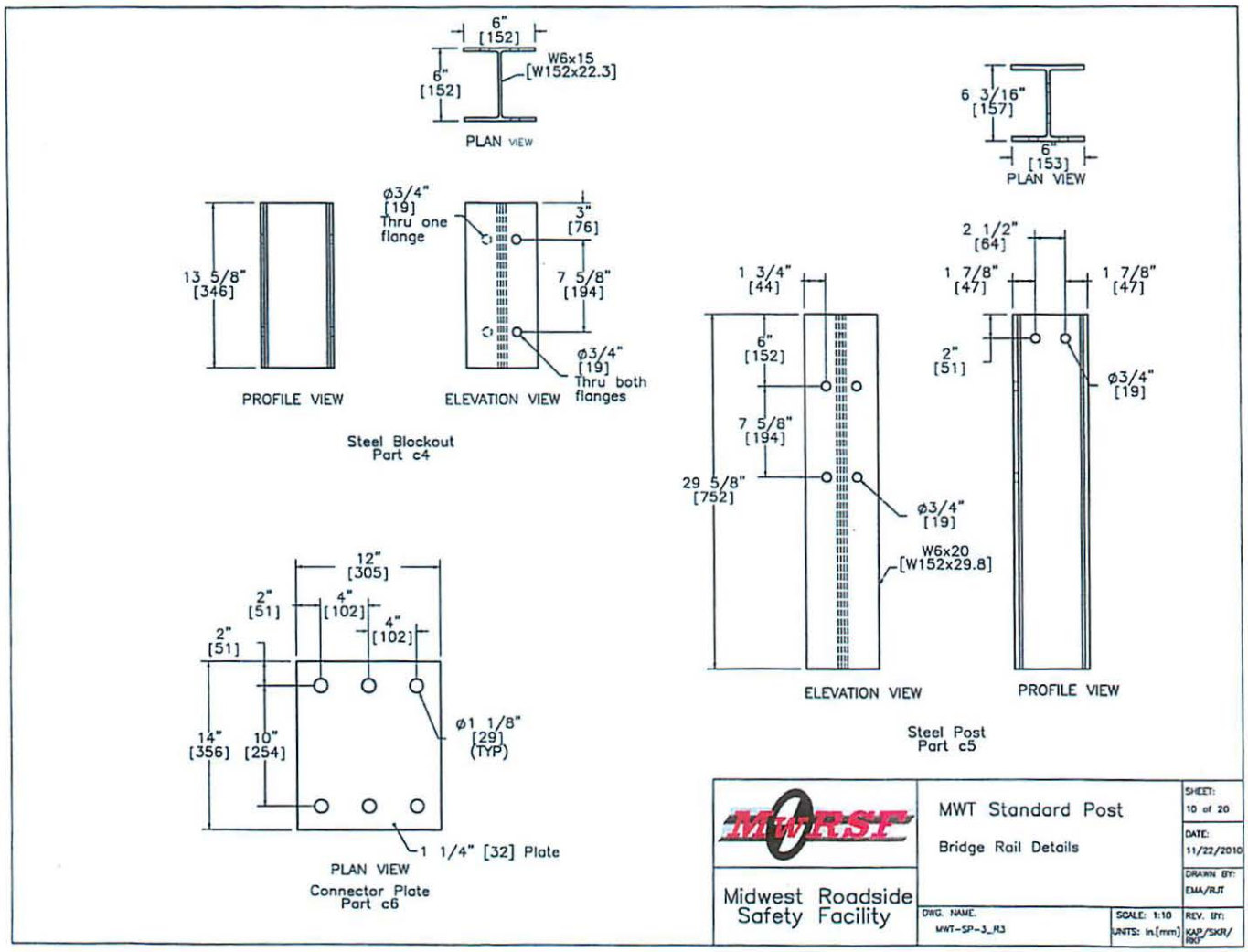
6" [152]
6" [152]
W6x15 [W152x22.3]
PLAN VIEW
6 3/16" [157]
6" [153]
PLAN VIEW
13 5/8" [346]
PROFILE VIEW
ø3/4" [19] Thru one flange
3" [76]
7 5/8" [194]
ø3/4" [19] Thru both flanges
ELEVATION VIEW
Steel Blockout Part c4
1 3/4" [44]
6" [152]
7 5/8" [194]
29 5/8" [752]
ø3/4" [19]
W6x20 [W152x29.8]
ELEVATION VIEW
2 1/2" [64]
1 7/8" [47]
1 7/8" [47]
2" [51]
ø3/4" [19]
PROFILE VIEW
Steel Post Part c5
12" [305]
2" [51]
4" [102]
4" [102]
2" [51]
14" [356]
10" [254]
ø1 1/8" [29] (TYP)
1 1/4" [32] Plate
PLAN VIEW
Connector Plate Part c6
MWRSF
Midwest Roadside Safety Facility
MWT Standard Post
Bridge Rail Details
SHEET: 10 of 20
DATE: 11/22/2010
DRAWN BY: EMA/RJT
DWG. NAME. MWT-SP-3_R3
SCALE: 1:10
UNITS: in.[mm]
REV. BY: KAP/SKR/RKF

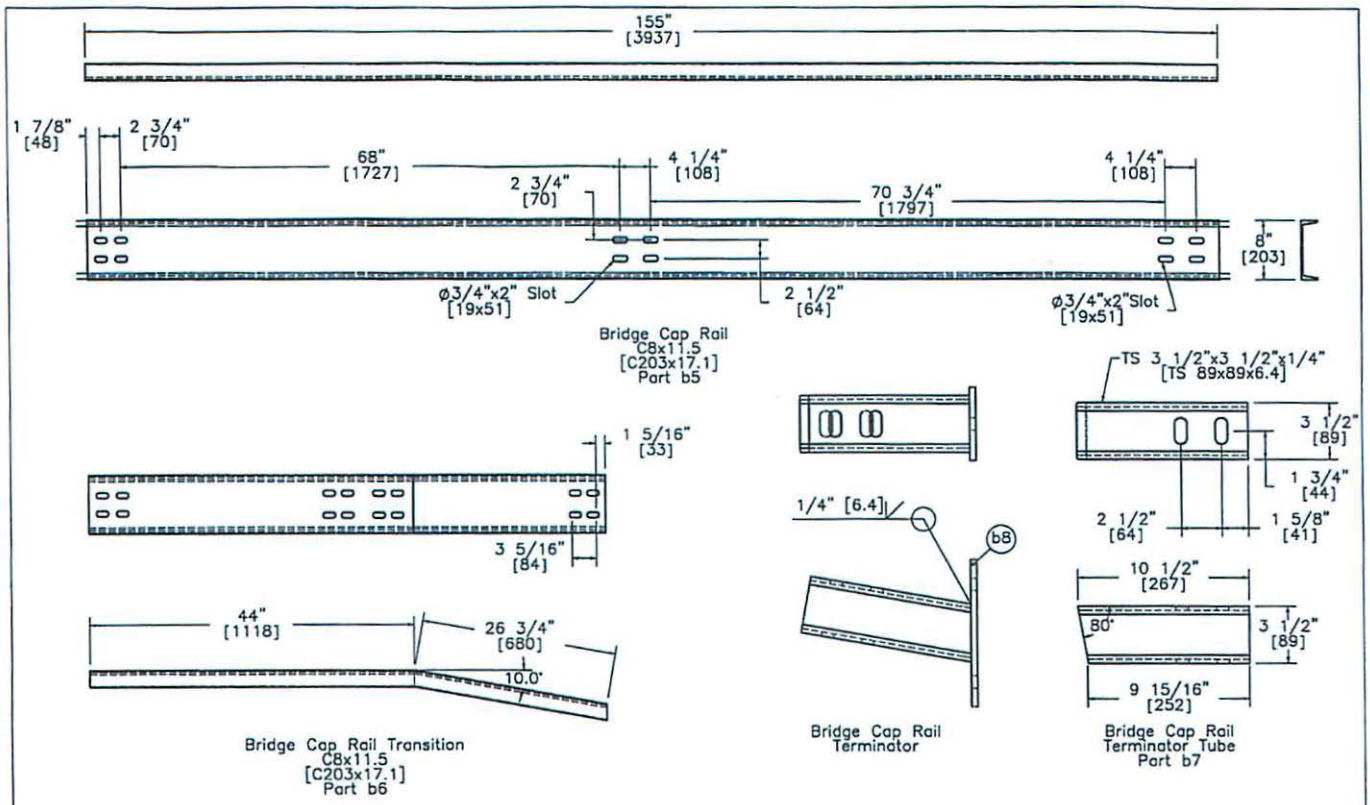

Midwest Roadside Safety Facility

MWT Standard Post

Bridge Rail Details

SHEET:	11 of 20
DATE:	11/22/2010
DRAWN BY:	EMA/RJT
DWG. NAME:	MWT-SP-3_R3
SCALE:	None
UNITS:	in.[mm]
REV. BY:	KAP/SKR/RKC

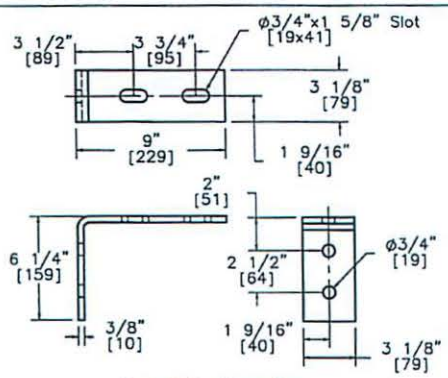

Bent Plate Connector
L 6 1/4"x9"x3/8"
[L 159x229x10]
Part b3

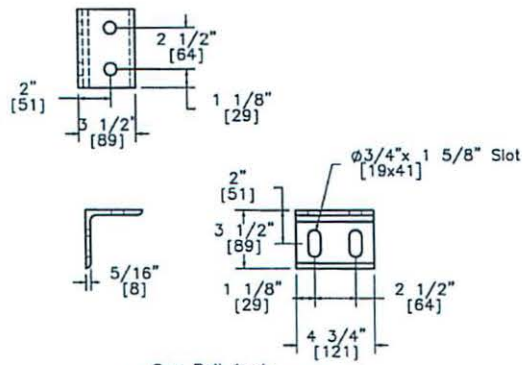

Cap Rail Angle
L 3 1/2"x3 1/2"x 5/16"
[L 89x89x8]
Part b4

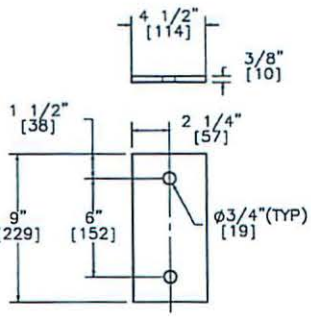

Bridge Cap Rail
Terminator Plate
Part b8

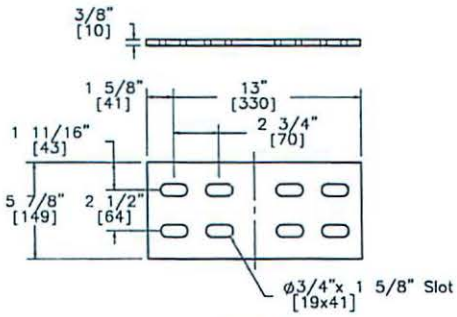

Splice Plate
Part b9

MwRSF Midwest Roadside Safety Facility	MWT Standard Post Bridge Rail Details	SHEET: 12 of 20 DATE: 11/22/2010 DRAWN BY: EMA/RJT
	DWG. NAME. MWT-SP-3_R3 / SCALE: 1:8 / UNITS: In.[mm]	REV. BY: KAP/SKR/RKJ

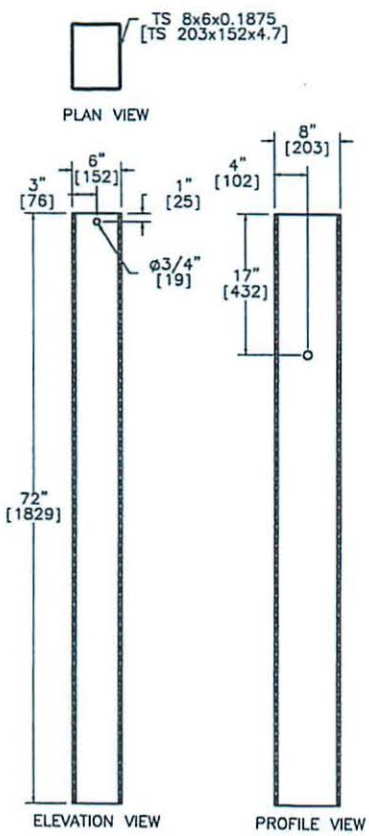

Foundation Tube
Part b1

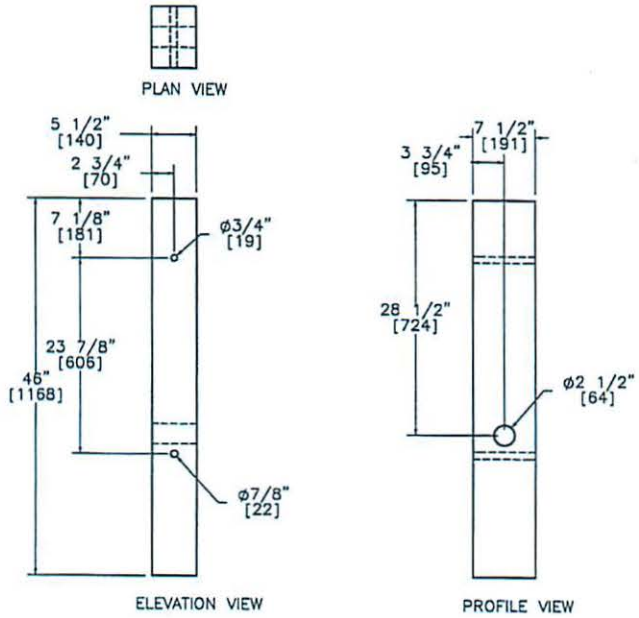

BCT (MGS) Timber Post
Part b2

MwRSF Midwest Roadside Safety Facility	MWT Standard Post BCT Timber Posts & Foundation Tube Detail	SHEET: 13 of 20
		DATE: 11/22/2010
		DRAWN BY: EMA/RJT
	DWG. NAME: MWT-SP-3_R3 / SCALE: 1:16 / UNITS: in.[mm]	REV. BY: KAP/SKR/RKF

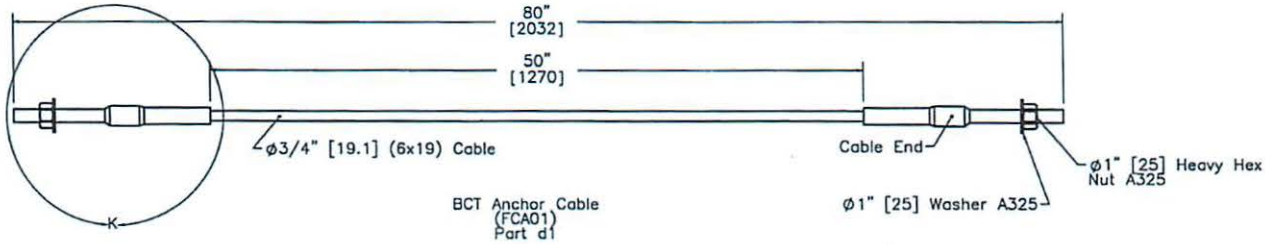

BCT Anchor Cable
(FCA01)
Part d1

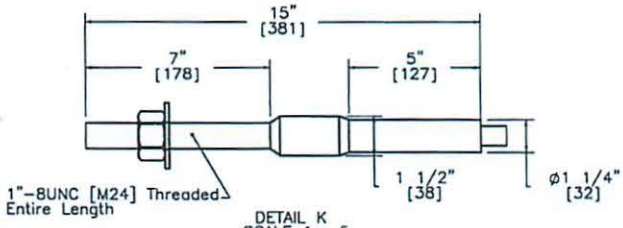

DETAIL K
SCALE 1 : 5

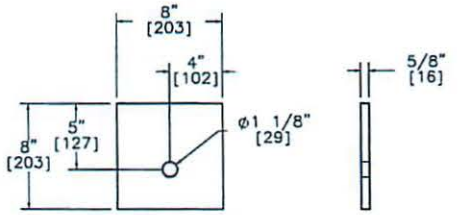

PROFILE VIEW

ELEVATION VIEW

Anchor Cable Bearing Plate
(FPB01)
Part d2

MWRSF Midwest Roadside Safety Facility	MWT Standard Post BCT Anchor Cable Detail	SHEET: 14 of 20
		DATE: 11/22/2010
		DRAWN BY: EMA/RJT
	DWG. NAME. MWT-SP-3_R3 / SCALE: 1:10 UNITS: in.[mm]	REV. BY: KAP/SKR/RKJ

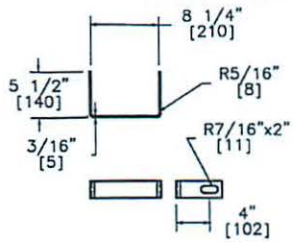

Yoke Detail

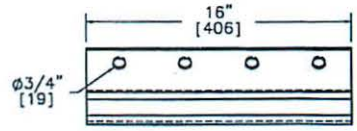

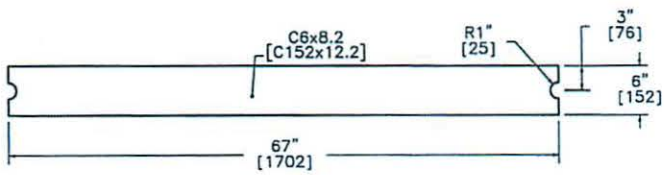

Strut Detail

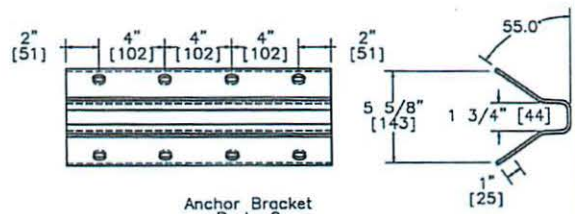

Anchor Bracket
Part c2

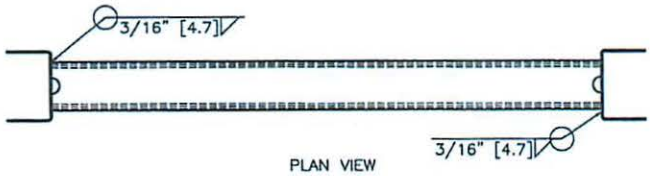

PLAN VIEW

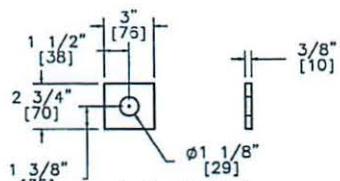

Anchor Bracket
Bearing Plate

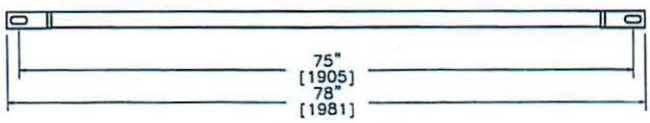

ELEVATION VIEW

Ground Strut
Part c1

MWRSF Midwest Roadside Safety Facility	MWT Standard Post Ground Strut & Anchor Bracket Details	SHEET: 15 of 20
		DATE: 11/22/2010
		DRAWN BY: EMA/RJT
	DWG. NAME. MWT-SP-3_R3	SCALE: None UNITS: In.[mm]
		REV. BY: KAP/SKR/RKF

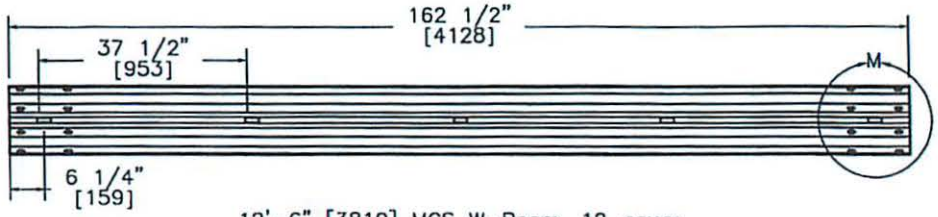

12'-6" [3810] MGS W-Beam, 12 gauge
Part d4

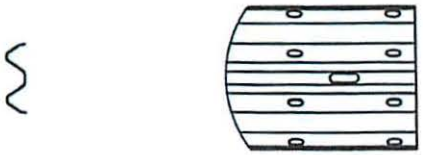

DETAIL M
SCALE 1 : 15

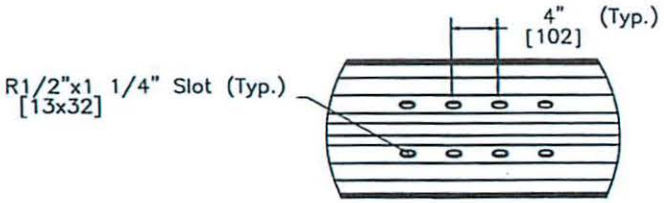

DETAIL N
SCALE 1 : 15

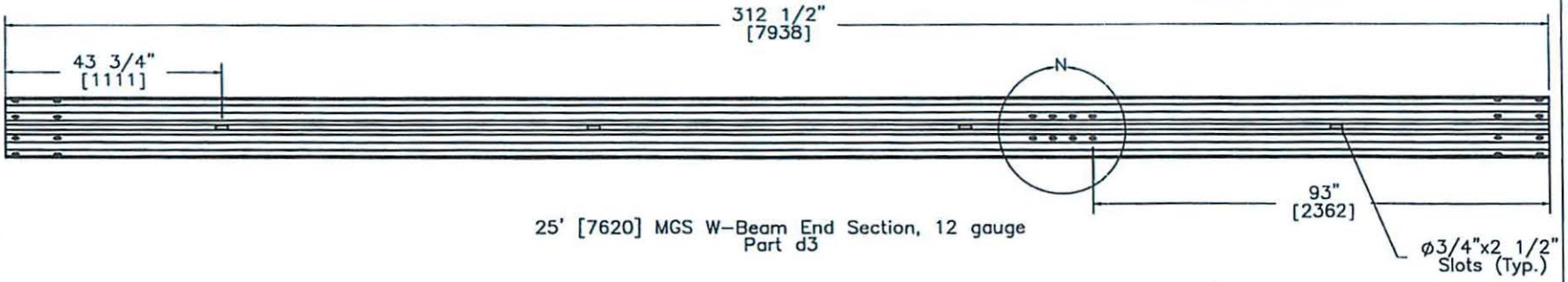

25' [7620] MGS W-Beam End Section, 12 gauge
Part d3

MWRSF Midwest Roadside Safety Facility	MWT Standard Post Rail Section Details	SHEET: 16 of 20 DATE: 11/22/2010 DRAWN BY: EMA/RJT
	DWG. NAME. MWT-SP-3_R3 SCALE: 1:31 UNITS: in.[mm]	REV. BY: KAP/SKR/RKF

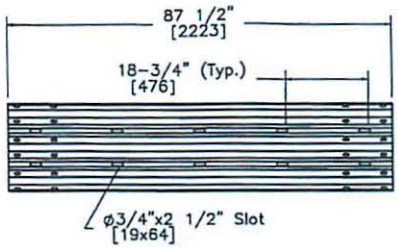

6'-3" [1905] Thrie Beam Section, 12 gauge,
1/4 Post Spacing
Part d5

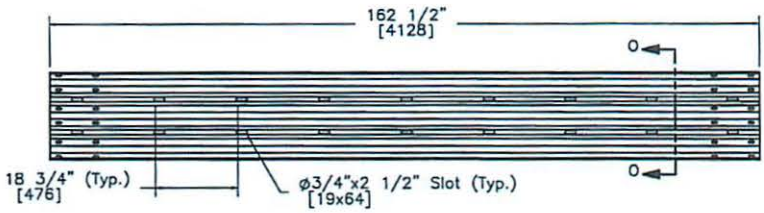

12'-6" [3810] Thrie Beam Section, 12 gauge,
1/4 Post Spacing
Part c3

SECTION O-O

MWRSF Midwest Roadside Safety Facility	MWT Standard Post Rail Section Details	SHEET: 17 of 20
		DATE: 11/22/2010
		DRAWN BY: EMA/RJT
	DWG. NAME: MWT-SP-3_R3 / SCALE: 1:30 / UNITS: in.[mm]	REV. BY: KAP/SKR/RKF

Midwest Guardrail System with Standard Post Spacing				
Item No.	QTY.	Description	Material Spec	Hardware Guide
a1	1	6'-3" [1905] W-Beam to Thrie-Beam Transition Section	10 gauge AASHTO M180	–
a2	7	6x12x14 1/4" [152x305x362] Blockout	SYP Grade No.1 or better	–
a3	6	6x12x19" [152x305x483] Blockout – Post 10–15	SYP Grade No.1 or better	–
a4	2	6x8x19" [152x305x483] Blockout – Post 16–17	SYP Grade No.1 or better	–
a5	1	6x8x15" [152x305x381] Blockout – Post 18	SYP Grade No.1 or better	–
b1	2	72" [1829] Foundation Tube	A500 Grade B	PTE05
b2	2	BCT Timber Post –MGS Height	SYP Grade No. 1 or better	PDF01
b3	2	Bridge Cap Rail Bent Plate Connector 6 1/4x9x3/8" [159x229x9.5]	A36 Steel	–
b4	6	Bridge Cap Rail Angle 3 1/2x3 1/2x5/16" [89x89x7.9]	A36 Steel	–
b5	1	Bridge Cap Rail C8x11.5 [C203x17.1]	A36 Steel	–
b6	1	Bridge Cap Rail C8x11.5 [C203x17.1]	A36 Steel	–
b7	1	Bridge Cap Rail Terminator Tube 3 1/2x3 1/2x1/4" [89x89x6.4]	A36 Steel	–
b8	1	Terminator Plate 9x4 1/2x3/8" [229x114x9.5]	A36 Steel	–
b9	1	Bridge Cap Rail Splice Plate 5 7/8x13x3/8" [149x330x9.5]	A36 Steel	–
c1	1	Strut and Yoke Assembly	A36 Steel	PFP01
c2	1	Anchor Bracket	A36 Steel	FPA01
c3	3	12'-6" [3810] Thrie Beam Section – 1/2 Post Spacing	12 gauge AASHTO M180	–
c4	3	W6x15 [W152x22.3] Steel Bridge Blockout	A36 Steel	–
c5	3	W6x20 [W152x29.8] Steel Bridge Post	A36 Steel	–
c6	3	12x14x1 1/4" [305x356x32] Bridge Cap Connector Plate	A36 Steel	–
d1	1	BCT Anchor Cable 6' [1829] Long	6x19 Cable	FCA01
d2	1	8x8x5/8" [203x203x15.9] Anchor Bearing Plate	A36 Steel	FPB01
d3	1	25' [7620] W-Beam MGS End Section	12 gauge AASHTO M180	–
d4	2	12'-6" [3810] W-Beam MGS Section	12 gauge AASHTO M180	–
d5	1	6'-3" [1905] Thrie Beam Section – 1/2 Post Spacing	12 gauge AASHTO M180	–
d6	1	2 3/8" [60] O.D.x 6" [152] long BCT Hole insert	ASTM A53 Grade B Schedule 40	FMM02

Midwest Roadside Safety Facility

MWT Standard Post

Bill of Materials

SHEET: 18 of 20

DATE: 11/22/2010

DRAWN BY: EMA/RJT

DWG. NAME: MWT-SP-3_R3

SCALE: None

UNITS: in.[mm]

REV. BY: KAP/SKR/RKJ

Midwest Guardrail System with Standard Post Spacing				
Item No.	QTY.	Description	Material Spec	Hardware Guide
e1	20	1"Dia. [25] Flat Washer	Grade 5	FWC24a
e2	20	1"Dia. [25] Heavy Hex Nut	Grade 5	A325 or A449 Substitute
e3	18	1"Dia. [25] Threaded Rod	Grade A307	–
e4	116	5/8"Dia. [15.9] Flat Washer	Grade 5	–
e5	42	5/8"Dia. x 2" [M16x51] long Hex Head Bolt	Grade 5	FBX16a
e6	54	5/8"Dia. [15.9] Hex Nut	Grade 5	A325 or A449 Substitute
e7	2	5/8"Dia. x 5" [M16x127] long Hex Head Bolt	Grade 5	FBX16a
e8	4	7/8"Dia. [22.2] Flat Washer	Grade 5	FWC22a
e9	2	7/8"Dia. [22.2] Hex Nut	Grade 5	FBX22a
e10	2	7/8"Dia. x 7 1/2" [M22x191] long Hex Head Bolt	Grade 5	FBX22a
e11	2	5/8"Dia. x 10" [M16x254] long Hex Head Bolt	Grade 5	FBX16a
e12	8	5/8"Dia. x 1 1/2" [M16x38.1] long Hex Head Bolt	Grade 5	FBX16a
e13	8	5/8"Dia. x 10" [M16x254] long Guardrail Bolt	Grade A307	FBB03
e14	18	5/8"Dia. x 14" [M16x356] long Guardrail Bolt	Grade A307	FBB06
e15	8	16D Double Head Nail	–	–
e16	66	5/8"Dia. x 1 1/2" [M16x38] Guardrail Bolt	Grade A307	FBB01
e17	92	5/8"Dia. [15.9] Guardrail Nut	Grade 5	–
f1	7	W6x8.5 [W152x12.6] 72" [1829] long – Post Nos. 3–9	A36 Steel	–
f2	6	W6x8.5 [W152x12.6] 72" [1829] long – Post Nos. 10–15	A36 Steel	–
f3	1	W6x15 [W152x22.3] 84" [2134] long – Post No. 16	A36 Steel	–
f4	1	W6x15 [W152x22.3] 84" [2134] long – Post No. 17	A36 Steel	–
f5	1	W6x15 [W152x22.3] 84" [2134] long – Post No. 18	A36 Steel	–

Midwest Roadside Safety Facility

MWT Standard Post

Bill of Materials

SHEET: 19 of 20

DATE: 11/22/2010

DRAWN BY: EMA/RJT

DWG. NAME: MWT-SP-3_R3

SCALE: None

UNITS: in.[mm]

REV. BY: KAP/SKR/RKF

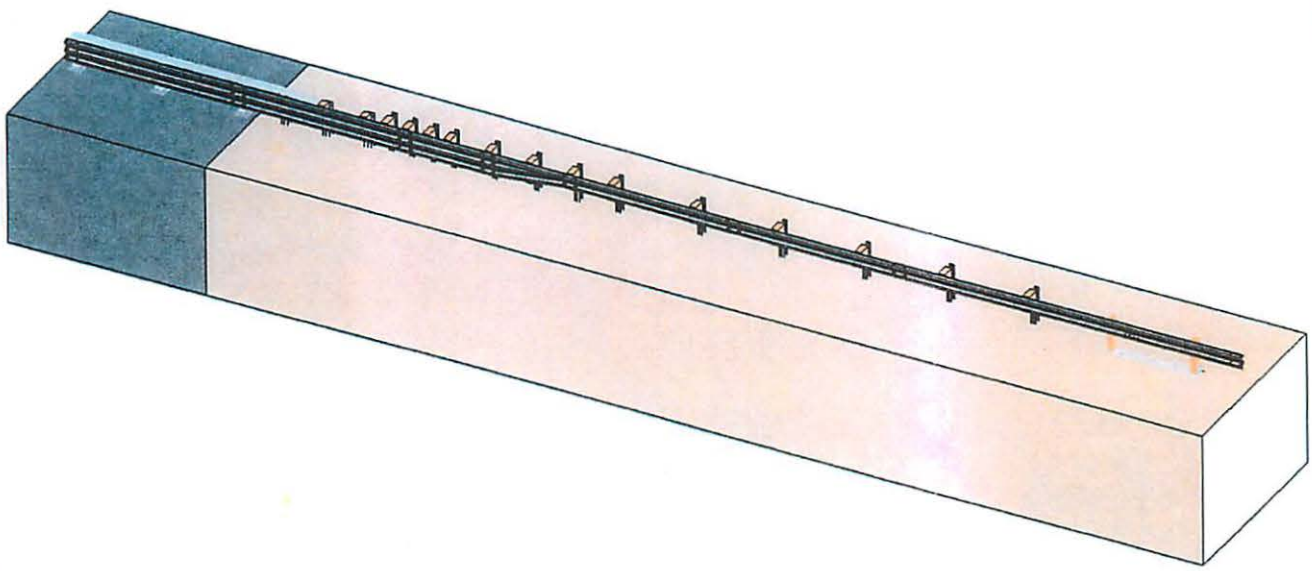

MwRSF Midwest Roadside Safety Facility	MWT Standard Post Isometric System View	SHEET: 20 of 20
		DATE: 11/22/2010
		DRAWN BY: EMA/RJT
	DWG. NAME. MWT-SP-3_R3 / SCALE: 1:105 / UNITS: in.[mm]	REV. BY: KAP/SKR/RKT